Oracle Utilities Network Management System

Adapters Guide

Release 2.5.0.1.0

F41249-01

March 2021

ORACLE

Oracle Utilities Network Management System Adapters Guide, Release 2.5.0.1.0

F41249-01

Copyright © 1991, 2021 Oracle and/or its affiliates. All rights reserved.

This software and related documentation are provided under a license agreement containing restrictions on use and disclosure and are protected by intellectual property laws. Except as expressly permitted in your license agreement or allowed by law, you may not use, copy, reproduce, translate, broadcast, modify, license, transmit, distribute, exhibit, perform, publish, or display any part, in any form, or by any means. Reverse engineering, disassembly, or decompilation of this software, unless required by law for interoperability, is prohibited.

The information contained herein is subject to change without notice and is not warranted to be error-free. If you find any errors, please report them to us in writing.

If this is software or related documentation that is delivered to the U.S. Government or anyone licensing it on behalf of the U.S. Government, then the following notice is applicable:

U.S. GOVERNMENT END USERS: Oracle programs (including any operating system, integrated software, any programs embedded, installed or activated on delivered hardware, and modifications of such programs) and Oracle computer documentation or other Oracle data delivered to or accessed by U.S. Government end users are “commercial computer software” or “commercial computer software documentation” pursuant to the applicable Federal Acquisition Regulation and agency-specific supplemental regulations. As such, the use, reproduction, duplication, release, display, disclosure, modification, preparation of derivative works, and/or adaptation of i) Oracle programs (including any operating system, integrated software, any programs embedded, installed or activated on delivered hardware, and modifications of such programs), ii) Oracle computer documentation and/or iii) other Oracle data, is subject to the rights and limitations specified in the license contained in the applicable contract. The terms governing the U.S. Government’s use of Oracle cloud services are defined by the applicable contract for such services. No other rights are granted to the U.S. Government.

This software or hardware is developed for general use in a variety of information management applications. It is not developed or intended for use in any inherently dangerous applications, including applications that may create a risk of personal injury. If you use this software or hardware in dangerous applications, then you shall be responsible to take all appropriate fail-safe, backup, redundancy, and other measures to ensure its safe use. Oracle Corporation and its affiliates disclaim any liability for any damages caused by use of this software or hardware in dangerous applications.

Oracle and Java are registered trademarks of Oracle and/or its affiliates. Other names may be trademarks of their respective owners.

Intel and Intel Inside are trademarks or registered trademarks of Intel Corporation. All SPARC trademarks are used under license and are trademarks or registered trademarks of SPARC International, Inc. AMD, Epyc, and the AMD logo are trademarks or registered trademarks of Advanced Micro Devices. UNIX is a registered trademark of The Open Group.

This software or hardware and documentation may provide access to or information about content, products, and services from third parties. Oracle Corporation and its affiliates are not responsible for and expressly disclaim all warranties of any kind with respect to third-party content, products, and services unless otherwise set forth in an applicable agreement between you and Oracle. Oracle Corporation and its affiliates will not be responsible for any loss, costs, or damages incurred due to your access to or use of third-party content, products, or services, except as set forth in an applicable agreement between you and Oracle.

Contents

Preface ..... **-xi**
Audience ..... -xi
Related Documents ..... -xi
Conventions ..... -xii

Chapter 1
Generic IVR Adapter **1-1**
Introduction 1-1
Supported Application Data Flows 1-2
IVR Data Flows with Oracle Utilities Network Management System 1-2
CIS Data Flows with Oracle Utilities Network Management System 1-2
Callbacks Application Data Flows with Oracle Utilities Network Management System 1-2
Interaction Diagram 1-3
Data Flow Details 1-3
Overview 1-3
Trouble Calls 1-3
Callback Requests 1-5
Callback Request Notes 1-6
Callback Responses 1-6
Adapter Installation 1-7
Ensure that the Generic IVR Adapter is installed. 1-7
Set Up the Generic IVR Adapter System Variables 1-7
Configure Adapter to run as NMS System Service 1-8
IVRAdapter Command Line Options 1-8
Load the Generic IVR Adapter Database Tables and Stored Procedures 1-14
Software Configuration 1-15
Overview 1-15
Trouble Call Mapping Configuration 1-15
Mapping to Customer-Defined Fields in Oracle Utilities Network Management System's INCIDENTS table 1-21
Trouble Callback Mapping Configuration 1-21
SRS Rules Configuration 1-22
Map Customer-Defined Fields in the INCIDENTS Table 1-22
callbackInterfaceEnabled SRS Rule 1-23
useExternalCause SRS Rule 1-23
customerPhoneParentheses SRS Rule 1-24
defaultCallbackAgent SRS Rule 1-24
callbackFeederTimeout SRS Rule 1-25
streetXsectionOffset SRS Rule 1-25
Generic IVR Adapter Trouble Call Performance 1-26
Generic IVR Adapter Troubleshooting 1-27
Database Schema 1-27
Overview 1-27

Database Table Schema 1-27
Stored Procedure Parameters 1-39
SRSInput Testing Utility Command Line Options 1-59
Terminology 1-60

Chapter 2
Smallworld GIS Adapter Template 2-1

Chapter 3
ESRI ArcGIS Adapter 3-1
Adapter Overview 3-1
Adapter Documentation 3-1

Chapter 4
Intergraph G/Electric Adapter 4-1
Adapter Overview 4-1
Adapter Documentation 4-1

Chapter 5
Generic IBM MQ Mobile Adapter 5-1
Introduction 5-1
Overview Description 5-1
Terminology 5-2
Functional Description 5-2
Functional Requirements 5-3
Hardware and Software Requirements 5-4
Required Installed Software 5-5
Adapter Installation 5-5
Overview 5-5
Configure Queues for Required Data Flows 5-7
Design Overview 5-8
Configuration Concepts 5-8
Integration with System Services 5-10
Aggregation of Objects 5-10
Information Flows 5-11
Performance 5-11
High Level Messages 5-11
Information Models 5-12
Configuration 5-12
DML Files 5-13
Configuration Tables 5-39
Run Time Errors 5-47
DML Examples 5-48
DML Reference 5-54
Lexical Conventions 5-55
Basic Concepts 5-56
Order of Document Processing and Other Considerations 5-66
Ordering of Incidents in the Incident Object 5-67
DML Function Calls 5-69
List of Functions 5-69
Event Object Fields 5-142
Incident Object Fields 5-147
Permanent Order Object Fields 5-148
Permanent Relationship Object Fields 5-149

Chapter 6
SCADA Measurements 6-1

Introduction to scadapop 6-1
Configuration 6-1
RDBMS Configuration 6-1
Recaching Measurements 6-2
Information Model 6-3
Database Schema 6-3

Chapter 7
Generic SCADA Adapter 7-1
Introduction 7-1
Generic SCADA Adapter Configuration 7-1
RDBMS vs. File Mode 7-1
Configure Adapter to Run as an NMS System Service 7-2
SRS_RULES Configuration for Generic SCADA Adapter 7-2
Command Line Options for Generic SCADA Adapter 7-3
CES_PARAMETERS Configuration 7-5
Measurement Configuration 7-6
Using SCADAPOP 7-6
RDBMS Configuration 7-10
File-Based (RTAdapter) 7-12
SCADA Data - File Input 7-14
RDBMS Table Polling (RTDBAdapter) 7-16
Information Model 7-16
Database Schema 7-16
MultiSpeak Integration 7-31
DataRaker Integration 7-32
Use Cases 7-33

Chapter 8
ICCP Adapter 8-1
ICCP Adapter Overview 8-1
ICCP Blocks 8-2
Live Energy Connect ICCP Adapter Configuration 8-2
Configuring the Adapter to Run as a System Service 8-2
Populating the NMS Measurements Tables 8-10
Information Model - Database Schema 8-11
Populating the NMS Measurements Tables 8-15
Information Model - Database Schema 8-16

Chapter 9
Specific SCADA Adapters 9-1
OSI SCADA Adapter 9-1
General Configuration Parameters 9-1
Point List Configuration 9-2
Real-Time States/Values 9-3
Tags 9-4
Controls 9-4
Simulation 9-4
Navigation 9-5

Chapter 10
SCADA Calculation Engine 10-1
Introduction 10-1
SCADA Calculation Engine Database Configuration 10-1
Examples 10-2
SCADA Calculation Engine SRS Rules Configuration 10-2

Chapter 11

MultiSpeak Adapter 11-1
Introduction 11-1
Installation 11-2
Installation Overview 11-2
Adapter Installation Instructions for Oracle WebLogic Server 11-2
JMS Transport Mechanism 11-5
Software Configuration 11-7
Support for Encrypted Configuration Parameters 11-7
AMR Configuration Parameters 11-7
Overriding Configuration Parameters 11-15
Storing Meter Readings in AMR_RESPONSES Table 11-16
AVL Configuration Parameters 11-17
Credentials Files 11-18
Oracle Utilities Network Management System Configuration Rules 11-19
Supported Data Flows 11-23
AMR_REQUESTS 11-31
AMR_RESPONSES 11-32
AMR_CU_METERS 11-33
AMR_CU_METERS_HISTORY 11-34
AMR_VOLTAGE_HISTORY 11-34
SCADA Component 11-34
Supported Data Flows 11-35
NMS to SCADA 11-35
SCADA to NMS 11-44
Software Configuration 11-52
CES_PARAMETERS 11-52
Plugin Support 11-66
Methods 11-67
Building Custom SCADA Plug-ins 11-75
High-Level Messages 11-75
SCADA 11-75
Troubleshooting 11-77
Security Best Practices 11-78

Chapter 12

Mobile Workforce Management Adapter

Introduction 12-1
Installation 12-2
Adapter Installation Instructions for Oracle WebLogic Server 12-2
Database Schema 12-5
OMS_MWM_EVENTS 12-5
OMS_MWM_ACTIVITIES 12-6
OMS_MWM_ALARMS 12-7
OMS_MWM_CREW_ACTIONS 12-7
Supported Data Flows 12-8
Outgoing Flows 12-8
Incoming Flows 12-9
Software Configuration 12-10
Support for Encrypted Configuration Parameters 12-10
Configuration Parameters 12-11
Oracle Utilities Network Management System Configuration Rules 12-15
High-Level Messages 12-21
Troubleshooting 12-21

Chapter 13

SOAP Web Services

Authentication 13-1
Trouble Management Web Service 13-1
Port TroubleServiceSOAP 13-1
Switching and Safety Web Service 13-4
Port SwmanServiceBeanPort 13-4
Port SwmanServiceDocBeanPort 13-4
Damage Assessment Web Service 13-14
Port DamageServiceSOAP 13-14

Chapter 14

REST API 14-1
Authentication 14-1
Resources 14-2
Post /dmg-rest/event-update/{event} 14-4
POST /dmg-rest/event-update/{event} 14-4
GET /dmg-rest/reports 14-4
POST /dmg-rest/reports 14-5
GET /dmg-rest/reports/{id} 14-6
POST /dmg-rest/reports/{id} 14-6
GET /dmg-rest/reports/{id}/attachments/{att_id} 14-7
PUT /dmg-rest/reports/{id}/attachments/{att_id} 14-7
DELETE /dmg-rest/reports/{id}/attachments/{att_id} 14-8
GET /dmg-rest/reports/config/{cfg} 14-9
GET /mobile/messages-partition-changes/{sub-id} 14-10
GET /mobile/unsubscribe-partition-changes/{sub-id} 14-10
POST /mobile/device/{handle}/trace 14-11
PUT /mobile/attachments/{report-type}/{report-id}/{attachment-id} 14-12
DELETE /mobile/attachments/{report-type}/{report-id}/{attachment-id} 14-12
GET /mobile/control-zones 14-13
GET /mobile/dataset/{table} 14-13
PUT /mobile/dataset/{table} 14-14
GET /mobile/feeders 14-14
GET /mobile/confirm-services/{handle} 14-15
PUT /mobile/confirm-services 14-15
GET /mobile/conditions 14-16
GET /mobile/conditions/device/{handle} 14-17
GET /mobile/conditions/{class} 14-17
POST /mobile/condition/{class} 14-17
PUT /mobile/condition/{class}/{id}/{status} 14-18
GET /mobile/crews/{id}/availability 14-18
GET /mobile/crews/{id}/status 14-19
POST /mobile/crews/{id}/status 14-20
GET /mobile/get-permissions 14-20
GET /mobile/mobile-user-validation 14-21
GET /mobile/create-new-account 14-21
GET /mobile/set-current-crew/{id} 14-22
GET /mobile/damage-device-details 14-22
PUT /mobile/device/unassess 14-23
GET /mobile/devices 14-23
GET /mobile/maps 14-24
GET /mobile/crews 14-24
GET /mobile/crews/{id} 14-25

GET /mobile/crews/user/{user id} 14-25
GET /mobile/crews/{id}/assignments 14-26
POST /mobile/crews/{id}/assignments/{event-id}/dispatch 14-26
POST /mobile/crews/{id}/assignments/{event-id}/onsite 14-27
POST /mobile/crews/{id}/assignments/{event-id}/undispatch 14-28
POST /mobile/crews/{id}/assignments/{event-id}/assign 14-29
POST /mobile/crews/{id}/assignments/{event-id}/unassign 14-30
POST /mobile/crews/{id}/assignments/{event-id}/undispatch-and-assign 14-31
POST /mobile/crews/{id}/assignments/{event-id}/undispatch-and-assign-and-dispatch/{new-event-id} 14-32
GET /trbl-rest/events/{id} 14-33
GET /mobile/application-version/{name}/{arch} 14-38
GET /mobile/application/{name}/{arch} 14-39
POST /mobile/mobile-user-logout 14-40
GET /mobile/device/{id}/info 14-41
GET /mobile/device/{id}/operate/{operation}/phases/{phases}/time/{time} 14-42
GET /mobile/{id}/customers 14-44
GET /mobile/maps/{mapname} 14-45
GET /mobile/file/:dir_name /:file_name 14-45
POST /mobile/crew 14-46
GET /mobile/condition/{class}/{id} 14-46
PUT /mobile/condition/{class}/{id}/text/{text} 14-47
DELETE /mobile/condition/{class}/{id} 14-47
GET /mobile/switch-sheets/assignments/{crew-key} 14-48
PUT /mobile/switch-sheets/{sheet-class}/{sheet-index}/document 14-54
POST /mobile/hlm 14-55
GET /mobile/lookup-types/{table}/{keyField}/{valueField} 14-56
GET /mobile/nms-status 14-56
PUT /trbl-rest/event/{id}/confirm-outage 14-57
POST /trbl-rest/event/{id}/log-once 14-58
PUT /trbl-rest/event/{id}/release-all 14-59
POST /trbl-rest/event/{id}/state-transition 14-59
GET /trbl-rest/events/{id}/customers 14-60
POST /trbl-rest/user-log 14-60
POST /trbl-rest/user-log-once 14-61
POST /trbl-rest/events/{id}/associate 14-61

Chapter 15

Weather Data Adapter 15-1

Adapter Overview 15-1
Data Import Formats 15-2
Flat CSV Files 15-2
External Database Table 15-3
NOAA Weather Service 15-4
Running the Adapter 15-5
Related Runtime and Configuration Tables 15-6

Chapter 16

DERMS Adapter 16-1

Overview 16-1
Configuration 16-1
PF_DERMS_ADAPTER_CONFIG 16-2
Running the Adapter 16-3
Database Tables 16-4
Log Files 16-5

Chapter 17

Profile Adapter 17-1
Adapter Overview 17-1
PV Profile Creation 17-1
Load Profile Creation 17-2
SRS Rule Configuration 17-3
Running the Adapter 17-3
Error Handling 17-6

Chapter 18

Switching Adapter 18-1
Introduction 18-1
Installation 18-1
Installation Overview 18-1
Adapter Installation Instructions for Oracle WebLogic Server 18-2
Software Configuration 18-3
Support for Encrypted Configuration Parameters 18-3
SwmanUserText_en_US.properties 18-5
JBot Commands 18-5
SWMAN_INTERFACE_UPDATES 18-6
SWMAN_INTERFACE_DOCUMENTS 18-7

Chapter 19

Web Switching and Web Safety Notifications 19-1
Web Switching 19-1
Web Safety 19-1
Java MDB Implementation 19-2

Preface

Please read through this guide thoroughly before beginning an installation or configuration of any supported adapters for the Oracle Utilities Network Management System.

Audience

This document is intended for administrators and engineers responsible for installing and configuring Oracle Utilities Network Management System adapters.

Related Documents

- *Oracle Utilities Network Management System Advanced Distribution Management System Implementation Guide*
- *Oracle Utilities Network Management System Configuration Guide*
- *Oracle Utilities Network Management System for Water User's Guide*
- *Oracle Utilities Network Management System Installation Guide*
- *Oracle Utilities Network Management System Licensing Information User Manual*
- *Oracle Utilities Network Management System Operations Mobile Application Installation and Deployment Guide*
- *Oracle Utilities Network Management System Quick Install Guide*
- *Oracle Utilities Network Management System Release Notes*
- *Oracle Utilities Network Management System Security Guide*
- *Oracle Utilities Network Management System User's Guide*

Conventions

The following text conventions are used in this document:

Convention	Meaning
boldface	Boldface type indicates graphical user interface elements associated with an action, or terms defined in text or the glossary.
italic	Italic type indicates book titles, emphasis, or placeholder variables for which you supply particular values.
monospace	Monospace type indicates commands within a paragraph, URLs, code in examples, text that appears on the screen, or text that you enter.

Chapter 1

Generic IVR Adapter

This chapter includes the following topics:

- Introduction
- Supported Application Data Flows
- Interaction Diagram
- Data Flow Details
- Adapter Installation
- Software Configuration
- SRS Rules Configuration
- Database Schema
- Terminology

Introduction

This chapter is an administration guide for the Oracle Utilities Network Management System Generic Interactive Voice Response (IVR) System Adapter. This chapter describes the processes required to install and configure the adapter to run with various IVR applications. This adapter has the following attributes:

- It is one of the adapters and tools that Oracle offers for integration with other product suites. It is a Unix application that generally executes on the Oracle Utilities Network Management System services server and is monitored through SMService.
- It has the ability to accept trouble calls from an external application and provide that external application with updates about existing outages.
- It can submit callback requests to an external application and receive callback responses from the external application.
- It can communicate with several external applications, such as Interactive Voice Response (IVR) systems, Customer Information System (CIS) and Callback applications.

Supported Application Data Flows

IVR Data Flows with Oracle Utilities Network Management System

The following are the Data Flows between an IVR system and Oracle Utilities Network Management System using the Generic IVR Adapter

- Creation of trouble calls from the IVR system to Oracle Utilities Network Management System
- Callback request information from Oracle Utilities Network Management System to the IVR system
- Callback response information from the IVR system to Oracle Utilities Network Management System

CIS Data Flows with Oracle Utilities Network Management System

The following are the Data Flows between a CIS and Oracle Utilities Network Management System using the Generic IVR Adapter

- Creation of trouble calls from the CIS application to Oracle Utilities Network Management System

Callbacks Application Data Flows with Oracle Utilities Network Management System

The following are the Data Flows between a Callback application and Oracle Utilities Network Management System using the Generic IVR Adapter

- Callback request information from Oracle Utilities Network Management System to the Callback application
- Callback response information from Callback application to Oracle Utilities Network Management System

Interaction Diagram

Below is a diagram of the interaction between Oracle Utilities Network Management System and various external applications via the Generic IVR Adapter.

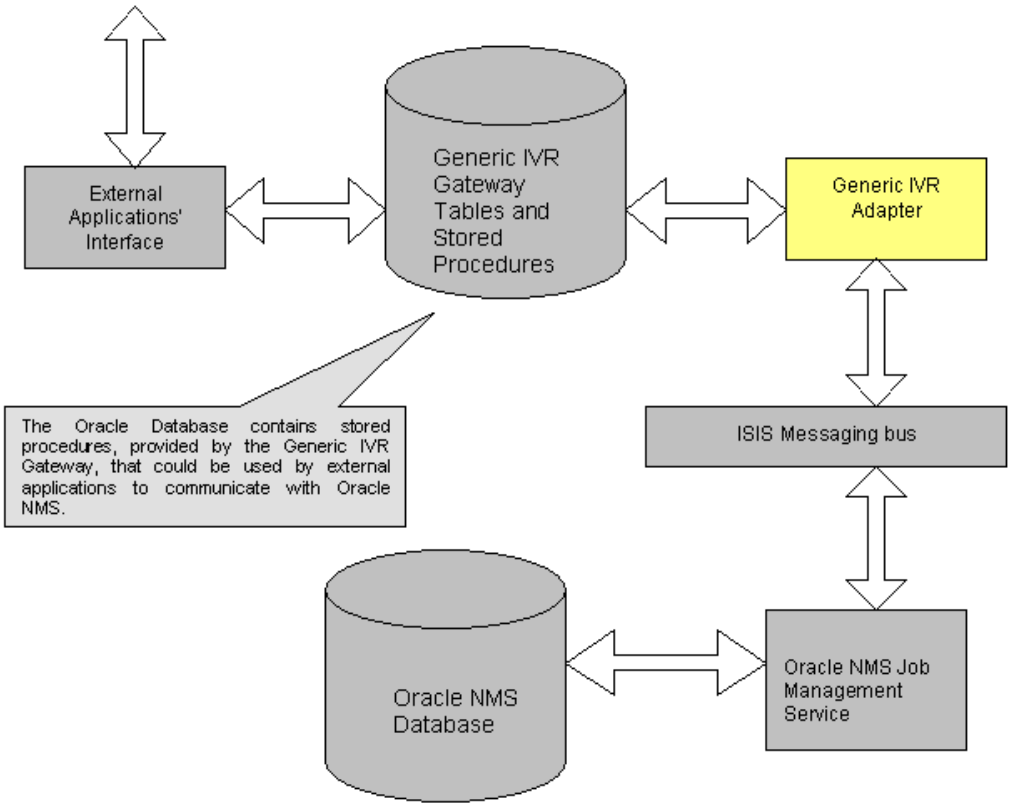

Note: In this document, it is assumed that the Generic IVR Adapter's tables and stored procedures would reside in the database used by Oracle Utilities Network Management System.

Data Flow Details

Overview

This section discusses in detail the data flows that are relevant to the Generic IVR Adapter. The data flows generally involve bilateral database tables that are populated or polled by the adapter or stored procedures that access internal NMS tables directly. The adapter data flows are turned on through command line switches, but the actual data transfer may be affected through the use of stored procedures.

Trouble Calls

New trouble calls need to be sent to Oracle Utilities Network Management System to apply the outage analysis algorithm to predict the outage device. The Generic IVR Adapter provides the submit_call stored procedure to pass trouble call information from the external application to Oracle Utilities Network Management System.

There are two PL/SQL packages available for interacting with the Generic IVR Adapter. Package pk_ivr_interface allows a full range of functionality provided by the adapter to be

used. Package pk_ccb, which supports integration of NMS to Customer Information System (CIS), provides procedure for submitting trouble calls through Generic IVR Adapter.

Data Flow Characteristics

The following are characteristics of the Trouble Calls Data Flow

Characteristics	Value
Table	TROUBLE_CALLS. For schema information, see TROUBLE_CALLS Table Schema on page 1-27.
Stored Procedures	pk_ivr_interface.pr_trouble_calls and pk_ccb.submit_call For stored procedure parameter information, see pk_ccb.submit_call on page 1-39 and pr_trouble_calls on page 1-51.
Direction	external application to Oracle Utilities Network Management System
Generic IVR Adapter Data Retrieval Frequency to Oracle Utilities Network Management System	Periodic (configurable)

Data Flow Steps

1. The external application invokes the submit_call stored procedure to submit a trouble call.
2. The submit_call stored procedure inserts the trouble call in the TROUBLE_CALLS table. Upon insertion, the TROUBLE_CALLS.CALL_STATUS field will be set to 'N' signifying a new trouble call.
3. The Generic IVR Adapter polls a configurable number of new records from the TROUBLE_CALLS table within a configurable poll period. The TROUBLE_CALLS.CALL_STATUS field is updated to 'I' (in progress) signifying that the trouble call is in the process of being submitted to the NMS Job Management Service (JMService).
4. Once processed, the retrieved records are submitted to NMS' JMService so the outage analysis algorithms could be used for the submitted trouble calls. The TROUBLE_CALLS.CALL_STATUS field is updated to 'C' (complete) signifying the trouble call has been successfully submitted from the external application to NMS.

Below is a summary of the information required to submit a trouble call via the pk_ccb.submit_call stored procedure.

If no numeric trouble code is provided, the default trouble code, which is generally a 1 followed by however many zeros are necessary to satisfy the project defined trouble code, will be used. The length of the trouble code is defined by the number of distinct "**group_order**" entries in the **srs_trouble_codes** table.

Note that the pr_trouble_calls stored procedure is also provided to accomplish essentially the same goal - inserting a trouble call record into the trouble_calls table.

The pk_ccb.submit_call stored procedure is used to submit:

- Trouble calls for a particular customer (known premise/service point). This includes entering the meeting time for job site appointments when there needs to be a planned outage to perform non-utility work at a location, such as tree removal near a power line or house painting.

- Fuzzy calls'

  When a fuzzy call is created at least one of the following call identifiers must be provided:

  - The caller's name
  - The caller's phone number
  - The caller's ID (i.e., 911 reference ID provided by the caller (911)).
  - Location must also be provided. A Location can be:
    - a street intersection (provide two street names) or
    - a street segment (provide a block number and a street name)
    - City and State are optional

Callback Requests

A customer may request that he/she be called back as soon as the outage that he/she reported has been restored. The Generic IVR Adapter provides the stored procedure pr_trouble_callback_requests to be used by an external application that is managing the callback process. This procedure returns a list of calls where the customer has requested a callback.

Data Flow Characteristics

The following are characteristics for the Callback Request Data Flow:

Characteristics	Value
Table	TROUBLE_CALLBACKS. For schema information, see TROUBLE_CALLBACKS Table Schema on page 1-35.
Stored Procedure	pr_trouble_callback_requests. For stored procedure parameter information, see pr_trouble_callback_requests on page 1-54
Direction	Oracle Utilities Network Management System to external application
Generic IVR Adapter Data Retrieval Frequency from Oracle Utilities Network Management System	Periodic (configurable)

Data Flow Steps

1. When an outage with a corresponding callback request is restored, Oracle Utilities Network Management System builds a callback list.
2. From the list, callback requests could be assigned to callback agents or to the external application, either in a manual (using Oracle Utilities Network Management System Web Callbacks) or an automated manner (via SRS rules).
3. The Generic IVR Adapter retrieves all callback requests assigned to the external application and inserts the callback requests to the TROUBLE_CALLBACKS table. The PROCESS_STATUS field of the callback request in the table would be set to 'N' signifying that the callback request is new. The CALLBACK_DONE field of the callback request in the table would be set to 'N' signifying that the callback has not yet been done.

4. The Generic IVR Adapter provides the pr_trouble_callback_requests stored procedure, which picks new callback requests from the TROUBLE_CALLBACKS table.
5. The external application could use the pr_trouble_callback_requests stored procedure to pick new callback requests. Callback requests that were picked are marked with a PROCESS_STATUS field equal to 'I' (callback response in progress) on the TROUBLE_CALLBACKS table.

Callback Request Notes

Once an outage event or a non-outage event is restored, callbacks are generated if the call is marked for a callback. All events have a restoration, either explicit or implicit, so any event can generate a callback. Also, in the event that the customer called multiple times, the customer will receive multiple callbacks if he requested a callback on each call. JMService gathers every call associated with an event, without filtering duplicate callers. Every call that is marked for callback will receive a callback.

Callback Responses

The external application calls the customer to confirm if power has been restored or not. The result of this call is passed from the external application to Oracle Utilities Network Management System via the pr_trouble_callback_responses stored procedure.

Data Flow Characteristics

The following are characteristics of the Callback Responses Data Flow:

Characteristics	Value
Table	TROUBLE_CALLBACKS. For schema information, see TROUBLE_CALLBACKS Table Schema on page 1-35.
Stored Procedure	pr_trouble_callback_responses. For stored procedure parameter information, see pr_trouble_callback_requests on page 1-54.
Direction	external application to Oracle Utilities Network Management System
Generic IVR Adapter Data Update Frequency to Oracle Utilities Network Management System	Periodic (configurable)

Data Flow Steps

1. The external application calls the customer to confirm if power has been restored. The result of this call is passed back to Oracle Utilities Network Management System via the pr_trouble_callback_responses stored procedure.
2. The stored procedure uses the incident number and premise ID combination (or the external ID and premise ID combination if the first combination is not provided) to identify a callback record in the TROUBLE_CALLBACKS table that would be receiving a response.
3. The stored procedure updates the identified callback in the TROUBLE_CALLBACKS table by updating the following fields:
    - The callback's CALLBACK_DONE field to 'Y' signifying that the callback was already done.

- The callback's CALLBACK_TIME field. CALLBACK_TIME field defaults to the system date if no value was provided.
- The callback's CALLBACK_STATUS field with the appropriate callback response code.

4. The Oracle Utilities Network Management System Generic IVR Adapter queries the TROUBLE_CALLBACKS table for new callback responses received and sends this information to Oracle Utilities Network Management System.
5. In Oracle Utilities Network Management System, the callback could get completed or cancelled or a new event (with the original call information) will be created, depending on the callback response.

Callback Response Notes

When a callback is made and no response from customer is received, a callback time will still be recorded. Any callback time that is submitted with a status is propagated, even if the status is no reply from the customer. It is understood in this case to be the last attempted callback. Also, when a nested outage is found, the new call and event are backdated to the original outage time.

Note: NMS does not track callback history.

Adapter Installation

This section describes how to install the Oracle Utilities Network Management System Generic IVR Adapter.

Ensure that the Generic IVR Adapter is installed.

- Verify that the following files are found in their respective folders
- $NMS_BASE/lib/libIVRAdapter.so
- $NMS_BASE/bin/IVRAdapter
- $NMS_BASE/bin/nms-ivr-gateway
- $NMS_SQL_FILES/nms_retain_ivr_interface.sql
- $NMS_SQL_FILES/nms_ivr_interface_head.sql
- $NMS_BASE/nms_ivr_interface_body.plb
- $NMS_BASE/bin/troubleCallCreate
- $NMS_BASE/bin/ivrCallPerPoll
- $NMS_BASE/bin/ivrPollPeriod

Set Up the Generic IVR Adapter System Variables

Include the following variables in the system variables definition:

Variable	Value
IVR_RDBMS_HOST	same as $RDBMS_HOST defined in the system
IVR_ORACLE_SID	same as $ORACLE_SID defined in the system

Note that this is set up in the `.nmsrc` file located in the $NMS_HOME (and configured by running `nms-env-config`). After the set up of the system variables, make sure that the `.nmsrc` is rerun or a new terminal is opened. The above set up assumes that the database where the Generic IVR Adapter tables and stored procedures would reside would be the same database used by the Oracle Utilities Network Management System environment.

Note also that the IVR RDBMS can be set up to be a completely separate RDBMS from the production RDBMS instance (hence these environment variables). This option may be considered if a project wants to maintain separation between the call taking process and the call processing process. With a separate RDBMS instance trouble calls can still be captured even if the production NMS RDBMS instance is down - for example. This is considered an advanced form of configuration and generally requires certain tables be replicated between the two RDBMS instances to guarantee calls can still be properly captured when the NMS RDBMS is down. Please consult Oracle support or your project engineer for more information if this type of configuration is desired.

Configure Adapter to run as NMS System Service

Configure the Generic IVR Adapter to run as an Oracle Utilities Network Management System service by updating the `$NMS_HOME/etc/system.dat` file to include the Generic IVR Adapter as a system service. There are three main sections where this service needs to be defined: the service, program, and instance sections. See the `$NMS_BASE/templates/system.dat.template` file for examples of how to configure the Generic IVR Adapter. Search for IVRAdapter in the file and copy those lines to `$NMS_HOME/etc/system.dat` file. Make sure all lines are uncommented so that they are active. You must restart the system services in order for the Generic IVR Adapter to be properly monitored by SMService. See the following section for details on command line options for the Generic IVR Adapter.

IVRAdapter Command Line Options

The section below lists the possible command line options for the Generic IVR Adapter. This section also introduces a tool that randomly creates trouble calls, along with its command line options. Performance tuning and high-level diagnostic messages that could be used on the Generic IVR Adapter will be discussed in this section as well.

The Generic IVR Adapter provides various command line options that enables Data Flows and configures Data Flow behavior. The following enumerates the command line options of the Generic IVR Adapter.

```
IVRAdapter -help
           -troublecall
           -omscbreq
           -omscbresp
           -cleantable
           -debug [0-2]
           -callperpoll NUMBERCALLS
           -pollperiod SECONDS
           -docustquery
           -cbreqinterval SECONDS
           -cbrespinterval SECONDS
           -cleaninterval HOURS
           -keepdbinfo DAYS
           -cbagent AGENTNAME
         [ -cbAny | -cbLast ]
```

This section groups the Generic IVR Adapter command line options under the context of the Data Flow or Data Flows it is associated to.

Generic IVR Adapter Generic Command Line Options

The following are the Generic IVR Adapter command line options that are independent from any Data Flow:

Option	Usage	Description
help	IVRAdapter -help	Displays the available command line options
debug	IVRAdapter -debug LEVEL (where LEVEL is 0, 1 or 2)	Runs gateway in debug mode. Associated number represents the debug level range from 0 to 2.

Trouble Call Data Flow Command Line Options

The following are the Generic IVR Adapter command line options that are related to the Trouble Calls Data Flow. For more information, see Trouble Calls on page 1-3.

Option	Usage	Description	Depends On	Default Value
troublecall	IVRAdapter -troublecall	Enables the Trouble Calls Data Flow. **Note**: This option must be enabled for CC&B - NMS integration.		
callperpoll	IVRAdapter -callperpoll NUMBERCALLS (where NUMBERCALLS is an integer)	Specifies the number of calls processed in the TROUBLE_CALLS table per poll of information.	troublecall	100 calls per poll of information
pollperiod	IVRAdapter -pollperiod SECONDS (where SECONDS is an integer)	Specifies the interval (in seconds) between two successive polls or queries from the TROUBLE_CALLS table	troublecall	a 6 second interval between two successive polls
docustquery	IVRAdapter -docustquery	If this option is selected, not all fields in the TROUBLE_CALLS table are directly fed to JMService. Instead, some of the fields would come from the CES_CUSTOMERS table. **Note**: This option should not be used in combination with the CC&B - NMS integration.	troublecall	

Callback Requests Data Flow Command Line Options

The following are the Generic IVR Adapter command line options that are related to the Callback Requests Data Flow. For more information, see Callback Requests on page 1-5.

Option	Usage	Description	Depends On	Default Value
omscbreq	IVRAdapter -omscbreq	Enables the Callback Requests Data Flow		
cbreqinterval	IVRAdapter -cbreqinterval SECONDS (where SECONDS is an integer)	Specifies the interval (in seconds) between two successive polls from the list of callback requests	omscbreq	a 5 second interval between two successive polls.
cbAny	IVRAdapter -cbAny	Callback is submitted to IVR if requested by the customer during any call.	omscbreq	

cbLast	IVRAdapter -cbLast	Callback is submitted to IVR if requested by the customer during the last call.	omscbreq

Callback Responses Data Flow Command Line Options

The following are the Generic IVR Adapter command line options that are related to the Callback Responses Data Flow. For more information, see Callback Responses on page 1-6.

Option	Usage	Description	Depends On	Default Value
omscbresp	IVRAdapter -omscbresp	Enables the Callback Responses Data Flow		
cbrespinterval	IVRAdapter -cbrespinterval SECONDS (where SECONDS is an integer)	Specifies the interval (in seconds) between two successive polls from the TROUBLE_CALLBACKS table for received callback responses	omscbresp	a 5 second interval between two successive polls.

Command Line Options Used by Multiple Data Flows

The following are the Generic IVR Adapter command line options that are related to multiple Data Flows. On the 'Depends On' section, the term 'any option that enables a Data Flow' would pertain to either one of the following command line options: 'troublecall', 'omscbreq' and 'omscbresp'.

Option	Usage	Description	Depends On	Default Value
cleantable	IVRAdapter -cleantable	Could be used for any of the five Data Flows. A flag that allows the Generic IVR Adapter to remove some completed records from its tables.	any option that enables a Data Flow	
cleaninterval	IVRAdapter -cleaninterval HOURS (where HOURS is an integer)	Could be used for any of the five Data Flows. Specifies the interval (in HOURS) between two successive attempts to delete old (i.e., completed) records from the Oracle Utilities Network Management System Generic IVR Adapter tables.	Cleantable and any option that enables a Data Flow	1 hour between to successive delete attempts

Option	Usage	Description	Depends On	Default Value
keepdbinfo	IVRAdapter -keepdbinfo DAYS (where DAYS is an integer)	Could be used for any of the five Data Flows. Completed records on the Generic IVR Adapter tables older than the specified number of days will be deleted. Certain criteria apply on which records of the Oracle Utilities Network Management System Generic IVR Adapter tables are removed and how the records are aged.	Cleantable and any option that enables a Data Flow	3 days
cbagent	IVRAdapter –cbagent AGENTNAME (where AGENTNAME is a string)	Could be used for the Callback Requests and Callback Responses Data Flows. The agent name that the Generic IVR Adapter uses in retrieving calls from the callback list. Valid agent names are located in CES_USER and ENV_ACCESS tables. The agent name used should be an external agent, as indicated in the CES_USER table.	omscbreq or omscbresp	IVR

For the keepdbinfo command line options, a record that starts aging on a given day, say 9:00 p.m. would be considered one day old at 9:00 p.m. the next day (and not 12:00 a.m., which is just 3 hours from the time the record started aging).

troubleCallCreate Tool Command Line Options

Random trouble calls could be created and passed to the Generic IVR Adapter using the troubleCallCreate tool. The troubleCallCreate tool inserts entries to the TROUBLE_CALLS table. From here, the Generic IVR Adapter (through the Trouble Calls Data Flow) could fetch the new records from this table and pass this information to Oracle Utilities Network Management System, so Oracle Utilities Network Management System could apply the outage analysis algorithm to predict the outage device.

> **Note**: It is important for the Generic IVR Adapter System Variables to be set up to run the troubleCallCreate tool. For more information, see Set Up the Generic IVR Adapter System Variables on page 1-7.

The following are the command line options for the troubleCallCreate tool:

Option	Usage	Description	Default Value
help	troubleCallCreate –help	Displays the available command line options	
debug	troubleCallCreate -debug	Runs this tool in debug mode, defaulting the debug level to 2.	Defaults to debug level 2

Option	Usage	Description	Default Value
totalcalls	troubleCallCreate –totalcalls NUMBEROFCALLS (where NUMBEROFCALLS is an integer)	Specifies the number of trouble calls to be created	
troublecall	troubleCallCreate –troublecall	Creates one trouble call	

troubleCallCreate tool on testing Trouble Calls Data Flow

As the troubleCallCreate tool randomly creates trouble calls, this tool could be used to test the Trouble Calls Data Flow. For more information about this Data Flow, see Trouble Calls on page 1-3.

The troubleCallCreate tool uses the CES_CUSTOMERS table to retrieve some customer information that would be used as entries in the TROUBLE_CALLS table. The tool always begins querying the CES_CUSTOMERS table starting from the first row, each time it is invoked.

When multiple trouble calls would be created (using the 'totalcalls' command line option), the troubleCallCreate tool would place a different permutation of trouble code bits for each trouble call in the TROUBLE_CALLS table.

After running the troubleCallCreate tool, the results could be verified using the following database tables: '

- The TR OUBLE_CALLS table is populated with a new trouble call record (or with a certain number of trouble calls, assuming that the 'totalcalls' command line option was used).
- As the Generic IVR Adapter runs (using the Trouble Calls Data Flow), the INCIDENTS table is populated with new records.

  Note: The number of new records in the INCIDENTS table is less than or equal to the total number of new trouble calls in the TROUBLE_CALLS table, as Oracle Utilities Network Management System outage analysis algorithms allow grouping of calls based on various criteria.

troubleCallCreate tool on testing Callback Requests Data Flow

The Callback Requests Data Flow could be tested as well using the troubleCallCreate tool, since all trouble calls generated by such tool requires callback. For more information about this Data Flow, see Data Flow Details on page 1-3.

- For a generated trouble call, if part of the trouble code is described to be 'Power On', no record in the TROUBLE_CALLBACKS table will be generated even if the event is restored.

Load the Generic IVR Adapter Database Tables and Stored Procedures

- The `nms-ivr-gateway` script is responsible for loading various SQL files responsible for creating the Generic IVR Adapter tables and stored procedures. The `nms-ivr-gateway` script could call some or all of the following scripts depending on how it was invoked:
  - **`nms_retain_ivr_interface.sql`:** responsible for dropping and recreating the Generic IVR Adapter tables.
  - **`nms_ivr_interface_head.sql`:** responsible for loading the Generic IVR Adapter stored procedure head.
  - **nms_ivr_interface_body.plb:** responsible for loading the Generic IVR Adapter stored procedure body.
- To create the Generic IVR Adapter tables and stored procedure, run the following command:

  ```
  nms-ivr-gateway -offline
  ```

  Note: The command above recreates the Generic IVR Adapter table by dropping and creating it, therefore wiping out the contents of the Generic IVR Adapter tables.
- To create the Generic IVR Adapter stored procedure without dropping and recreating the Generic IVR Adapter tables, run the following command:

  ```
  nms-ivr-gateway
  ```

Software Configuration

This section is intended to help the user configure the Generic IVR Adapter that was installed on the previous section. This includes the default configuration used, and the modifications to the base configurations that need to be done in order to customize the adapter's behavior. The adapter needs to be restarted for configuration changes to take effect.

Overview

This section will discuss how to map pieces of trouble call information sent by the external application to specific database fields within Oracle Utilities Network Management System via the Trouble Call Mapping Properties Configuration file. Moreover, this section will discuss various SRS rules that could be used for the Generic IVR Adapter.

Trouble Call Mapping Configuration

The fields of the Generic IVR Adapter's TROUBLE_CALLS table could be mapped with the fields of Oracle Utilities Network Management System' INCIDENTS and JOBS table. This is done through column matching of TROUBLE_CALLS fields with JMS Input String (JMS.h), which is the standard product column and user-defined configuration through SRS_RULES.

For more information about the Generic IVR Adapter's TROUBLE_CALLS table, see TROUBLE_CALLS Table Schema on page 1-27.

Mapping to the Base Fields in Oracle Utilities Network Management System Tables

The following table explains how the base fields of the INCIDENTS and the JOBS tables of Oracle Utilities Network Management System are mapped with the fields of the TROUBLE_CALLS table of the Generic IVR Adapter.

Below is a description of each column

- The JMS Input String (first column) is the standard product column found in JMS.h, which is used to create calls with the JMS::sendJMSinput() API, within the Oracle Utilities Network Management System.
- The 'Description' column (second column) describes the content of the field.
- The 'Mapping to Oracle Utilities Network Management System Tables' column (third column) identifies to what fields of the INCIDENTS table or the JOBS table a given JMS Input String is tied up to. In this column, INC.<database field name> indicates that the field name is part of the INCIDENTS table; JOBS.<database field name> indicates that the field name is part of the JOBS table.
- The 'Mapping to TROUBLE_CALLS table' column (fourth column) identifies the TROUBLE_CALLS table column the JMS Input String is currently mapped to.

JMS Input String	Description	Mapping to System Tables	Mapping to TROUBLE_CALLS table
ADDR_BUILDING	Customer building address. The building number portion of the street address of the customer.	INC.ADDR_BUILDING	ADDR_BUILDING
ADDR_CITY	Customer city. The city or city/ state portion of the address of the customer.	INC.ADDR_CITY	ADDR_CITY

JMS Input String	Description	Mapping to System Tables	Mapping to TROUBLE_CALLS table
ADDR_CROSS_ STREET	Intersection cross street name. Name of the second cross street should be in ADDR_STREET field.	INC.ADDR_CROSS_STREET	ADDR_CROSS_ STREET
ADDR_STREET	Customer street address. The full street address of the customer.	INC.ADDRESS JOBS.ADDR_STREET	ADDR_STREET
ALTERNATE_PHONE	Alternative contact number. Alternate phone number for contacting the customer.	INC.ALTERNATE_PHONE	ALTERNATE_PHONE
APPT_RANGE	Appointment Range.	INC.APPT_RANGE	APPT_RANGE
APPT_TIME	Time of appointment.	INC.APPT_TIME	APPT_TIME
APPT_TYPE	Type of appointment.	INC.APPT_TYPE	APPT_TYPE
CALL_TIME	Input time of call. The input time of the incident. If not provided, the current time will be used.	INC.INPUT_TIME	CALL_TIME
CALL_TYPE	Type of call.	INC.TYPE	CALL_TYPE
CALLBACK_LATE	Callback late indicator. Indicates that it is OK to call back the customer beyond a defined 'late' time. This information is only stored in Oracle Utilities Network Management System. No other action is taken by Oracle Utilities Network Management System.	INC.CALLBACK_LATE	CALLBACK_LATE
CALLBACK_REQUEST	Indicates either a callback is requested or not.	INC.CALLBACK_REQUEST	CALLBACK_REQUEST
CALLBACK_TIME	Time callback requested. Time for which callback or a follow-up call was requested.	INC.CALLBACK_TIME	CALLBACK_TIME
CHECK_CUTOFF	Check cutoff customer indicator. If set to Y, check if the customer is disconnected, using the CES_DISCONNECTS table. If the customer is disconnected, the call will not be saved, an error will be returned and the VERIFY_DISCONNECTS table will be populated.		CHECK_CUTOFF
CID_ALIAS	Not used.		CID_ALIAS
CLUE	Indicates if call is clue if set to Y.	INC.CLUE	CLUE
COMBINE_PRI	Total priority of call.		COMBINE_PRI

JMS Input String	Description	Mapping to System Tables	Mapping to TROUBLE_CALLS table
COMMENT	Call-taker Comments. Comments provided by the customer or call-taker about the incident.	INC.OP_COMMENT	CALL_COMMENT
CUST_CALL_CANCEL	Call cancel indicator.	INC.CALL_CANCEL	CUST_CALL_CANCEL
CUST_CRITICAL	Critical customer indicator. This is added to the critical C count of the outage.	INC.CRITICAL_CUST	CUST_CRITICAL
CUST_DEVICE_ALIAS	The name of the device to which the customer is connected. This must be the alias of the device handle provided with CUST_DEVICE_CLS and CUST_DEVICE_IDX. If not provided, the service will query ODService to get this information, incurring a performance penalty in call processing.	INC.OBJECT	CUST_DEVICE_ALIAS
CUST_DEVICE_CLS	Customer device class. The class part of the handle for the device to which the customer is connected. If CUST_ID is provided, but the device is not, JMService will look up the customer device in the CES_CUSTOMERS table. If the provided device is a supply node, it will be put in SUPPLY_CLS & SUPPLY_IDX and the first stage device will be put in H_CLS & H_IDX.	INC.H_CLS	CUST_DEVICE_CLS
CUST_DEVICE_IDX	Customer device index. The index part of the handle for the device to which the customer is connected. See CUST_DEVICE_CLS above.	INC.H_IDX	CUST_DEVICE_IDX
CUST_DEVICE_NCG	NCG of customer device.	INC.NCG	CUST_DEVICE_NCG
CUST_DEVICE_ PARTITION	Partition of customer device.	INC.PARTITION	CUST_DEVICE_PARTITION
CUST_FIRST_NAME	Customer first name. The first name of the customer. If CUST_FIRST_NAME and CUST_LAST_NAME are both provided, they will be appended together with a space. The concatenated customer first and last name (with a space in the middle) may not be larger than 75 characters. This may be used for the full name of the customer if CUST_LAST_NAME is omitted.	INC.CUSTOMER_NAME JOBS.CUSTOMER_NAME	CUST_FIRST_NAME

JMS Input String	Description	Mapping to System Tables	Mapping to TROUBLE_CALLS table
CUST_ID	Unique identifier of a customer record in NMS. See CUST_DEVICE_CLS above.	INC.CID	CUST_ID
CUST_INTERSECT_ CLS	Intersecting device class.		CUST_INTERSECT_ CLS
CUST_INTERSECT_ IDX	Intersecting device index.		CUST_INTERSECT_ IDX
CUST_INTERSECT_ NCG	Intersecting NCG.		CUST_INTERSECT_ NCG
CUST_INTR_X	Intersecting X coordinate. X coordinate used for intersection grouping. See streetXsectionOffset SRS Rule for more information.		CUST_INTR_X
CUST_INTR_Y	Intersecting Y coordinate. Y coordinate used for intersection grouping. See streetXsectionOffset SRS Rule for more information.		CUST_INTR_Y
CUST_KEY	Customer account number.	INC.ACCOUNT_NUM	CUST_KEY
CUST_LAST_NAME	The last name of the customer. See CUST_FIRST_NAME above.	INC.CUSTOMER_NAME JOBS.CUSTOMER_NAME	CUST_LAST_NAME
CUST_LIFE_SUPPORT	Life support customer. If set to 'Y', indicates a life support customer. This is added to the critical K count of the outage.	INC.LIFE_SUPPORT	CUST_LIFE_SUPPORT
CUST_ORDER_NUM	Customer order number. Not used in the Oracle Utilities Network Management System.	INC.ORDER_NUMBER	CUST_ORDER_NUM
CUST_PHONE	Customer phone number. The non-area code portion of the customer phone number. If both CUST_PHONE and CUST_PHONE_AREA are provided, they will be appended according to the customerPhoneParentheses SRS rule. The concatenated customer phone number and area (including parentheses) may not be larger than 32 characters. This field may be used for the full customer phone number if CUST_PHONE_AREA is omitted. See customerPhoneParentheses SRS Rule for more information.	INC.CUSTOMER_PHONE JOBS.CUSTOMER_PHONE	CUST_PHONE

JMS Input String	Description	Mapping to System Tables	Mapping to TROUBLE_CALLS table
CUST_PHONE_AREA	Customer phone area code. The area code portion of the customer phone number. See CUST_PHONE above.	INC.CUSTOMER_PHONE JOBS.CUSTOMER_PHONE	CUST_PHOHE_AREA
CUST_PHONE_ UPDATE	Whether to update customer phone. If set to Y, the customer phone number will be updated in the CUSTOMER_PHONE_OVERRIDE table.		CUST_PHONE_ UPDATE
CUST_PRIORITY	Customer priority. This string is used to determine the critical customer type and priority of the customer.	INC.CUSTOMER_TYPE	CUST_PRIORITY
CUST_STATUS	Condition status of call.		CUST_STATUS
CUST_TROUBLE_ CODE	Customer complaint. The customer complaint (trouble code). This is a required field and must correspond with values in the SRS_TROUBLE_CODES table.	INC.COMPLAINT	CUST_TROUBLE_ CODE
CUST_TROUBLE_ QUEUE	Customer trouble queue.	INC.TROUBLE_QUEUE JOBS.TROUBLE_QUEUE	CUST_TROUBLE_ QUEUE
DRV_INST	Driving instructions.	INC.DRV_INSTR1	DRV_INST
EXTERNAL_ID	Unique call identifier. The unique identifier for the incident.	INC.EXTERNAL_ID JOBS.EXTERNAL_ID	EXTERNAL_ID
FUZZY_NCG_CLS	Fuzzy control zone class.		FUZZY_NCG_CLS
FUZZY_NCG_IDX	Fuzzy control zone index.		FUZZY_NCG_IDX
GENERAL_AREA	General Area. Not Used in the Oracle Utilities Network Management System.	INC.GENERAL_AREA	GENERAL_AREA
GROUP_BY_NAME	Fuzzy control zone name.		GROUP_BY_NAME
GROUPABLE	If set to Y, the call is groupable.	INC.GROUPABLE	GROUPABLE
MEET_TIME	Time of customer meet. If provided, meet created will be a future meet for the given time. Otherwise, if a meet is created it will be a critical meet. MEET_TYPE must be provided to create a meet.	INC.MEET_TIME	MEET_TIME

JMS Input String	Description	Mapping to System Tables	Mapping to TROUBLE_CALLS table
MEET_TYPE	Customer meet type. If set to 1, a new meet will be created. If set to 2, an existing meet will be rescheduled. If set to 3, an existing meet will be canceled. If any other value is provided, no meet will be created. May be used in conjunction with MEET_TIME.	INC.MEET_CODE	MEET_TYPE
METER_ID	Customer meter number.	INC.METER_ID	METER_ID
POWER_UP	Power-up call. Used for power-up messages from CellNet. Used for AMR.		POWER_UP
RELATED_EVT_APP	Related event application.		RELATED_EVT_APP
RELATED_EVT_CLS	Related event class.	INC. RELATED_CLS	RELATED_EVT_CLS
RELATED_EVT_IDX	Related event index.	INC. RELATED_IDX	RELATED_EVT_IDX
REPORTED_ERT	Est rest time reported to caller.	INC. REPORTED_EST_REST_TIME	REPORTED_ERT
SHORT_DESC	Short description of trouble.	INC.SHORT_DESC	SHORT_DESC
TROUBLE_LOC	Incident's trouble location.	INC.TROUBLE_LOC	TROUBLE_LOC
UPDATE_EXISTING_ INC	Whether to update an existing incident. If set to 1, then JMService will replace an existing incident for the same customer with the values passed in this call.		UPDATE_EXISTING_ INC
USER_NAME	Call-taker user name. The name of the call-taker or interface that created the call.	INC.USER_NAME	USER_NAME
X_REF	Customer X coordinate. X coordinate of customer or customer device.	INC.X_COORD	X_REF
Y_REF	Customer Y coordinate. Y coordinate of customer or customer device.	INC.Y_COORD	Y_REF

During initialization of IVRAdapter, TROUBLE_CALLS column are matched with the standard product column (JMS.h). If TROUBLE_CALLS field does not match, error will be logged and IVRAdapter will exit.

The following are some exceptions when matching TROUBLE_CALLS columns with JMS Input String:

- TROUBLE_CALLS.CALL_COMMENT – JMS Input String COMMENT
- TROUBLE_CALLS.CALL_STATUS – special column in TROUBLE_CALLS table that indicates that the call is new (N) or already processed (C).

- TROUBLE_CALLS.SUPPLY_ID – if this column exists, it replaces the value of TROUBLE_CALLS. CUST_DEVICE_IDX and TROUBLE_CALLS. CUST_DEVICE_CLS is set to 994.

Mapping to Customer-Defined Fields in Oracle Utilities Network Management System's INCIDENTS table

A configurable TROUBLE_CALLS column can also be done through SRS_RULES.

The following are the steps to map a new field in the TROUBLE_CALLS table with a new field in the INCIDENTS table:

1. Change the TROUBLE_CALLS table schema to include the customized field, for instance, TC_FIELD_ONE.
2. Change the INCIDENTS table schema to include a new field that will be mapped to TC_FIELD_ONE. For instance the new field on the INCIDENTS table would be INC_FIELD_ONE.
3. Create a new SRS Rule that maps the '201' (TROUBLE_CALLS reserve name) with the new field in the INCIDENTS table, INC_FIELD_ONE. See the Map Customer-Defined Fields in the INCIDENTS Table on page 1-22 SRS rule for more information.
4. Restart JMService and the Generic IVR Adapter.

   Note: Before considering the option of introducing new fields in the TROUBLE_CALLS table and the INCIDENTS table, it is advisable to discuss such option with your Project Engineer.

Trouble Callback Mapping Configuration

IVR Adapter allows arbitrary information from the PICKLIST_INFO_UPD_TR table to be included into callback request. Columns CB_DETAIL1, CB_DETAIL2, CB_DETAIL3 and CB_DETAIL4 in the TROUBLE_CALLBACKS database table are used for this purpose. Database table IVR_ADAPTER_CONFIG is used to define if/how these columns should be populated.

Field Name	Nullable	Data Type	Description
CONFIG_ITEM	N	VARCHAR2(32)	Column name in the TROUBLE_CALLBACKS database table, which should be populated from the PICKLIST_INFO_UPD_TR table. Valid values are
CONFIG_VALUE	N	VARCHAR2(32)	Column name in the PICKLIST_INFO_UPD_TR table, which should be used as the data source.

SRS Rules Configuration

The following are SRS rules that could be used with the Generic IVR Adapter. These SRS rules can be included in the <project>_srs_rules.sql file.

Map Customer-Defined Fields in the INCIDENTS Table

Oracle Utilities Network Management System and the Generic IVR Adapter provides a mechanism to receive additional trouble call information from the external application and have this information stored in a new customer-defined field in the INCIDENTS table of Oracle Utilities Network Management System.

The configurable TROUBLE_CALLS column name has special names '201', '202', up to '209' to serve this purpose. Normally, a regular column name in TROUBLE_CALLS like CALL_COMMENT or COMMENT in JMS Input String is tied to a specific field of the INCIDENTS table by default. For this case, it's the OP_COMMENT field. A special name like '201' could be mapped to a new field in the INCIDENTS table by using an SRS rule. The table below details how an SRS rule could be used to do this mapping. An SRS rule like this has to be used for each mapping. See Map Customer-Defined Fields in the INCIDENTS Table on page 1-22 for more information.

Field Name	Value
SET_NAME	'config_incident'
INCIDENT_TYPE	'customer_defined'
RULE_NAME	the name of the new column in the INCIDENTS table
RULE_VALUE_1	'str', 'date', 'int', 'float' 'str' is for strings, 'date' is for dates, 'int' is for integers, and 'float' is for floats. This represents the data type of the new column.
RULE_VALUE_2	An integer, representing the value of the SRS input configuration item specifying this field -- must have a value of 200 or greater
RULE_VALUE_INTEGER_1	0 (not used)
RULE_VALUE_INTEGER_2	0 (not used)
RULE_VALUE_INTEGER_3	0 (not used)
RULE_VALUE_INTEGER_4	0 (not used)
RULE_VALUE_INTEGER_5	0 (not used)

callbackInterfaceEnabled SRS Rule

If set to 'yes' then SRS APIs for manipulating callback information will become available. It has to be set to 'yes' for Web Callback GUI to operate. This rule holds outage information in JMService memory on a special data structure until this time expires OR all customer callbacks for the outage are complete.

Field Name	Value
SET_NAME	'config'
INCIDENT_TYPE	'any'
RULE_VALUE_1	'yes' or 'no' (default: 'no')
RULE_VALUE_2	0 (not used)
RULE_VALUE_INTEGER_1	0 (not used)
RULE_VALUE_INTEGER_2	0 (not used)
RULE_VALUE_INTEGER_3	0 (not used)
RULE_VALUE_INTEGER_4	0 (not used)
RULE_VALUE_INTEGER_5	0 (not used)

useExternalCause SRS Rule

If set to 'yes' then the IVR Adapter's callback requests data flow will include the cause code when it populates the TROUBLE_CALLBACKS table. The cause code value will be taken from JOBS.CAUSE.

Field Name	Value
SET_NAME	'config'
INCIDENT_TYPE	'any'
RULE_VALUE_1	'yes' or 'no' (default: 'yes')
RULE_VALUE_2	0 (not used)
RULE_VALUE_INTEGER_1	0 (not used)
RULE_VALUE_INTEGER_2	0 (not used)
RULE_VALUE_INTEGER_3	0 (not used)
RULE_VALUE_INTEGER_4	0 (not used)
RULE_VALUE_INTEGER_5	0 (not used)

customerPhoneParentheses SRS Rule

If rule_value_1 set to 'yes', parentheses will be added to customer call phone numbers in the following format: **(AREA)NUMBER**. Otherwise, the number and area will be concatenated together without parentheses.

Field Name	Value
SET_NAME	'config'
INCIDENT_TYPE	'any'
RULE_VALUE_1	'yes' or 'no' (Default: 'yes')
RULE_VALUE_2	0 (not used)
RULE_VALUE_INTEGER_1	0 (not used)
RULE_VALUE_INTEGER_2	0 (not used)
RULE_VALUE_INTEGER_3	0 (not used)
RULE_VALUE_INTEGER_4	0 (not used)
RULE_VALUE_INTEGER_5	0 (not used)

defaultCallbackAgent SRS Rule

Specifies username of the default callback agent. All new callbacks will be automatically assigned to this agent. If this rule is not set then new callbacks will be left unassigned.

> **Note:** This rule only takes effect if the rule callbackInterfaceEnabled set to 'yes'. See callbackInterfaceEnabled SRS Rule on page 1-23 for more information. The agent name used should be considered as an external agent in the CES_USER and ENV_ACCESS tables. Also, it is recommended that 'IVR' be used as a value of RULE_VALUE_1, as this is the default callback agent name that the Generic IVR Adapter uses when the adapter runs.

Field Name	Value
SET_NAME	'config'
INCIDENT_TYPE	'any'
RULE_VALUE_1	callback agent username
RULE_VALUE_2	0 (not used)
RULE_VALUE_INTEGER_1	0 (not used)
RULE_VALUE_INTEGER_2	0 (not used)
RULE_VALUE_INTEGER_3	0 (not used)
RULE_VALUE_INTEGER_4	0 (not used)
RULE_VALUE_INTEGER_5	0 (not used)

callbackFeederTimeout SRS Rule

The maximum time allowed (in minutes) between the current time and the restoration time of a resolution in callback module before the resolution is deemed too old to remain or be loaded into the callback module. This rule holds outage info in JMService memory in a special data structure until this time expires OR all customer callbacks for the outage are complete.

If this rule is set to 0 then resolutions will be kept in JMService until all callbacks are completed.

> **Note:** This rule **must** be used in conjunction with the callbackInterfaceEnabled SRS Rule on page 1-23.

Field Name	Value
INCIDENT_TYPE	'flowControlGeneral'
RULE_VALUE_1	"" (not used)
RULE_VALUE_2	An integer, representing a number of minutes (Default: 2880 -- *48 hours*)
RULE_VALUE_INTEGER_1	0 (not used)
RULE_VALUE_INTEGER_2	0 (not used)
RULE_VALUE_INTEGER_3	0 (not used)
RULE_VALUE_INTEGER_4	0 (not used)
RULE_VALUE_INTEGER_5	0 (not used)

streetXsectionOffset SRS Rule

Specifies the size of the maximum bounding rectangle to be used in grouping street intersection fuzzy calls to supply nodes. The rectangle will be the area where:

```
x E [xsection_x - THIS RULE VALUE, xsection_x + THIS RULE VALUE]
                                   and
y E [xsection_y - THIS RULE VALUE, xsection_y + THIS RULE VALUE]
```

This is an integer. Check your world coordinate system for a reasonable integer value.

This rule is used once for each rectangle desired (i.e., multiple instances of this rule may exist in a single rule set). For example, a larger rectangle size may be desired in a rural control zone and a smaller rectangle in an urban control zone.

Field Name	**Value**
RULE_VALUE_1	'' (not used)
RULE_VALUE_2	integer (Default: none)
RULE_VALUE_INTEGER_1	0 (not used)
RULE_VALUE_INTEGER_2	0 (not used)
RULE_VALUE_INTEGER_3	0 (not used)
RULE_VALUE_INTEGER_4	0 (not used)
RULE_VALUE_INTEGER_5	0 (not used)

Field Name	Value
NCG_CLS	integer, representing ncg_cls of desired applicable control zone level
NCG_IDX	integer, representing ncg_idx of desired applicable control zone level

Generic IVR Adapter Trouble Call Performance

The maximum rate at which the Generic IVR Adapter injects trouble calls into the Oracle Utilities Network Management System is initially determined using the `-callperpoll` and `-pollperiod` command line parameters in the system.dat file. If these parameters are not set, the Generic IVR Adapter will, by default, retrieve a maximum of 100 trouble calls from the TROUBLE_CALLS table every six seconds and send these calls into the MMM via JMService. This corresponds to a maximum hourly call rate of 60,000 calls per hour.

If it is necessary to change this call rate while the adapter is running, two scripts are provided: ivrCallPerPoll and ivrPollPeriod. These scripts may be used to adjust the number of calls retrieved during each poll cycle and the period between poll cycles while the adapter is running.

> **Note**: If the adapter is restarted, these parameters (and the corresponding call rate) will revert to the command line parameters specified in the system.dat file (or the default values if no command line options are specified).

Command	Usage	Description
ivrCallPerPoll	ivrCallPerPoll NUM_CALLS_PER_POLL	Changes the number of calls retrieved from the TROUBLE_CALLS table during one poll cycle.
ivrPollPeriod	ivrPollPeriod NUM_SECONDS	Changes the period between poll cycles where calls are retrieved from the TROUBLE_CALLS table and submitted to JMService.

Generic IVR Adapter Troubleshooting

This section identifies high-level messages that could be sent to the Generic IVR Adapter using the `Action` command for troubleshooting purposes.

Command	Usage	Description
report	Action –services any.IVRGateway report	Reports back if the Generic IVR Adapter has started.
stop	Action –services any.IVRGateway stop	Stops the Generic IVR Adapter
debug	Action –services any.IVRGateway debug LEVEL (where LEVEL is 0, 1 or 2)	Sets the Generic IVR Adapter's debug level
cleantable	Action –services any.IVRGateway cleantable	Toggles the 'cleantable' command line option. Instructs if the Generic IVR Adapter should remove some records from its tables or not.

Note: It is important that the Generic IVR Adapter is already included in the System Data file to run high-level messages properly. For more information, see Configure Adapter to run as NMS System Service on page 1-8.

Database Schema

Overview

The following section defines in detail the schema of each database tables used by the Generic IVR Adapter. This section defines the parameters used by the Generic IVR Adapter's stored procedures.

Database Table Schema

TROUBLE_CALLS Table Schema

The TROUBLE_CALLS table stores the trouble calls that are submitted by the external application. The Generic IVR Adapter polls this table and submits new trouble call records to Oracle Utilities Network Management System, so Oracle Utilities Network Management System could apply the outage analysis algorithm to predict the outage device. The external application indirectly inserts records to the TROUBLE_CALLS table by invoking the pr_trouble_calls stored procedure. See pr_trouble_calls on page 1-51 for more information.

Each field of the TROUBLE_CALLS table is matched with SRSinput field. The mapping is configurable. A column names are directly tied up to a specific field of the INCIDENTS table or the JOBS table of Oracle Utilities Network Management System.

In effect, each field in the TROUBLE_CALLS table is mapped (and the mapping is configurable) to a particular field of the INCIDENTS table or the JOBS table of Oracle Utilities Network Management System. For more information, see Trouble Call Mapping Configuration on page 1-15.

In the 'Description' column, take note that field names prefixed with 'INC.' would come from the INCIDENTS table. Field names prefixed by 'JOBS.' would come from the JOBS table. Field names prefixed by 'CC.' would come from the CES_CUSTOMERS table.

Field Name	Nullable	Data Type	Description (JMS Input String Reference)
ADDR_BUILDING	Y	VARCHAR2(10)	Customer building address. Refer to ADDR_BUILDING for more information. Map to INC.ADDR_BUILDING
ADDR_CITY	Y	VARCHAR2(45)	Customer City/State. Refer to ADDR_CITY for more information. Maps to INC.ADDR_CITY
ADDR_CROSS_STREET	Y	VARCHAR2(255)	Intersection cross street name. Maps to INC.ADDR_CROSS_STREET.
ADDR_STREET	Y	VARCHAR2(255)	Customer address. Refer to ADDR_STREET for more information. Maps to INC.ADDRESS and JOBS.ADDR_STREET
ALTERNATE_PHONE	Y	VARCHAR2(32)	Alternative contact number. Refer to ALTERNATE_PHONE for more information. Maps to INC.ALTERNATE_PHONE
APPT_RANGE	Y	NUMBER	Appointment Range. Refer to APPT_RANGE for more information. Maps to INC.APPT_RANGE.
APPT_TIME	Y	DATE	Time of appointment. Refer to APPT_TIME for more information. Maps to INC.APPT_TIME.
APPT_TYPE	Y	VARCHAR2(16)	Type of appointment. Refer to APPT_TYPE for more information. Maps to INC.APPT_TYPE.
CALL_COMMENT	Y	VARCHAR2(255)	Customer Comment. Refer to COMMENT Property Name for more information. Maps to INC.OP_COMMENT.
CALL_ID	Y	VARCHAR2(16)	Not used.

Field Name	Nullable	Data Type	Description (JMS Input String Reference)
CALL_STATUS	Y	VARCHAR2(1)	Status of the trouble call in the TROUBLE_CALLS table. The Generic IVR Adapter uses this internally to identify the status of this trouble call. The possible values are as follows: 'N' - New trouble call 'I' - The Generic IVR Adapter is in the process of submitting this trouble call to Oracle Utilities Network Management System 'C' - Trouble call submission to Oracle Utilities Network Management System is completed. The Generic IVR Adapter uses this field as one of the criteria in purging the TROUBLE_CALLS table for 'old' records. Records with CALL_STATUS field = 'C' will be purged.
CALL_TIME	N	DATE	Input time of call. Refer to CALL_TIME for more information. Maps to INC.INPUT_TIME The Generic IVR Adapter uses this field as one of the criteria in purging the TROUBLE_CALLS table for 'old' records. The TROUBLE_CALL record is 'aged' based on the system date/time and the CALL_TIME field. Any record older than a predefined number of days will be removed. See keepdbinfo for more information.
CALL_TYPE	Y	VARCHAR2(8)	Type of call. Refer to CALL_TYPE for more information. Maps to INC.TYPE
CALLBACK_LATE	Y	VARCHAR2(1)	Callback late indicator. Refer to CALLBACK_LATE for more information. The possible values are as follows: 'Y' - It is OK to call back even when it is already late. 'N' - It is not OK to call back when it is already late. If no value was supplied, this field will default to 'N'. This information is only passed from the external application to Oracle Utilities Network Management System (using the Trouble Calls Data Flow), and back to the external application (using the Callback Requests Data Flow). No other action is taken.
CALLBACK_EMAIL	Y	VARCHAR2(254)	The callback email address.

Field Name	Nullable	Data Type	Description (JMS Input String Reference)
CALLBACK_METHOD	N	number	The callback method requested (1-phone, 2-text, 3-email).
CALLBACK_TEXT	Y	VARCHAR2(32)	The callback text number.
CALLBACK_REQUEST	Y	NUMBER	Callback request indicator. Refer to CALLBACK_REQUEST for more information. The possible values are as follows: '0' - callback not requested '1' - callback requested Maps to INC.CALLBACK_REQUEST
CALLBACK_TIME	Y	DATE	Callback Before Time. Refer to CALLBACK_TIME for more information. Maps to INC.CALLBACK_TIME
CHECK_CUTOFF	Y	VARCHAR2(1)	Check cut-off customer indicator. Refer to CHECK_CUTOFF for more information. The possible values are as follows: 'Y' - check if the customer is disconnected 'N' - do not perform checking.
CLUE	Y	NUMBER	Indicates if call is clue if set to Y. Refer to CLUE on page 1-16 for more information. Maps to INC.CLUE
COMBINE_PRI	Y	NUMBER	Total priority of call. Refer to COMBINE_PRI for more information.
CUST_CALL_CANCEL	Y	VARCHAR2(1)	Call cancel indicator. Refer to CUST_CALL_CANCEL for more information. Maps to INC.CALL_CANCEL
CUST_CRITICAL	Y	VARCHAR2(1)	Critical customer indicator. This is added to the critical C count of the outage. Refer to CUST_CRITICAL for more information. Maps to INC.CRITICAL_CUST
CUST_DEVICE_ALIAS	Y	VARCHAR2(32)	Customer Device Alias. Refer to CUST_DEVICE_ALIAS for more information. Maps to INC.OBJECT
CUST_DEVICE_CLS	Y	NUMBER	Corresponding CC.H_CLS field for the given CC.SERV_LOC_ID. This field does not have a corresponding input parameter in the pr_trouble_calls stored procedure. The stored procedure itself populates this field. Refer to CUST_DEVICE_CLS for more information. Maps to INC.H_CLS

Field Name	Nullable	Data Type	Description (JMS Input String Reference)
CUST_DEVICE_IDX	Y	NUMBER	Corresponding CC.H_IDX field for the given CC.SERV_LOC_ID. This field does not have a corresponding input parameter in the pr_trouble_calls stored procedure. The stored procedure itself populates this field. Refer to CUST_DEVICE_IDX for more information. Maps to INC.H_IDX
CUST_DEVICE_NCG	Y	NUMBER	NCG of customer device. Refer to CUST_DEVICE_NCG for more information. Maps to INC.NCG
CUST_DEVICE_PARTITIO N	Y	NUMBER	Partition of customer device. Refer to CUST_DEVICE_ PARTITION for more information. Maps to INC.PARTITION
CUST_FIRST_NAME	Y	VARCHAR2(75)	Customer Name. Refer to CUST_FIRST_NAME for more information. Maps to INC.CUSTOMER_NAME and JOBS.CUSTOMER_NAME
CUST_ID	Y	VARCHAR2(64)	Unique customer record identifier. Maps to INC.CID.
CUST_INTERSECT_CLS	Y	NUMBER	Intersecting device class. Refer to CUST_INTERSECT_ CLS for more information.
CUST_INTERSECT_IDX	Y	NUMBER	Intersecting device index. Refer to CUST_INTERSECT_ IDX for more information.
CUST_INTERSECT_NCG	Y	NUMBER	Intersecting NCG. Refer to CUST_INTERSECT_ NCG for more information.
CUST_INTR_X	Y	NUMBER	Intersecting X coordinate. X coordinate used for intersection grouping.
CUST_INTR_Y	Y	NUMBER	Intersecting Y coordinate.Y coordinate used for intersection grouping.
CUST_KEY	Y	VARCHAR2(16)	Corresponding CC.ACCOUNT_NUMBER field for the given CC.SERV_LOC_ID. This field does not have a corresponding input parameter in the pr_trouble_calls stored procedure. The stored procedure itself populates this field. Refer to CUST_KEY for more information. Maps to INC.ACCOUNT_NUM

Field Name	Nullable	Data Type	Description (JMS Input String Reference)
CUST_LAST_NAME	Y	VARCHAR2(75)	The last name of the customer. Refer to CUST_LAST_NAME for more information. Maps to INC.CUSTOMER_NAME and JOBS.CUSTOMER_NAME
CUST_LIFE_SUPPORT	Y	VARCHAR2(1)	Life support customer. Refer to CUST_LIFE_SUPPORT for more information. Maps to INC.LIFE_SUPPORT
CUST_ORDER_NUM	Y	VARCHAR2(16)	Customer order number. Refer to CUST_ORDER_NUM for more information. Maps to INC.ORDER_NUMBER
CUST_PHONE	Y	VARCHAR2(32)	Customer phone number. Refer to CUST_PHONE for more information. Maps to INC.CUSTOMER_PHONE and JOBS.CUSTOMER_PHONE
CUST_PHONE_AREA	Y	VARCHAR2(8)	Customer phone area code. Refer to CUST_PHONE_AREA for more information. Maps to INC.CUSTOMER_PHONE and JOBS.CUSTOMER_PHONE
CUST_PHONE_UPDATE	Y	VARCHAR2(1)	Whether to update customer phone. Refer to CUST_PHONE_ UPDATE for more information.
CUST_PRIORITY	Y	VARCHAR2(4)	Customer Priority. Refer to CUST_PRIORITY for more information. This is defined by customer and needs to be an integer string. Maps to INC.CUSTOMER_TYPE
CUST_STATUS	Y	NUMBER	Condition status of call.
CUST_TROUBLE_CODE	N	VARCHAR2(10)	Trouble code or customer complaint. Refer to CUST_TROUBLE_ CODE for more information. This is the trouble or complaint that the customer reports when making a call. The trouble code determines the priority of the incident. Trouble code mapping set up in Oracle Utilities Network Management System should be synchronized with the trouble code mapping set up on the external application. This is to ensure that the trouble code sent from the external application is interpreted similarly when the trouble code is received by Oracle Utilities Network Management System. Maps to INC.COMPLAINT

Field Name	Nullable	Data Type	Description (JMS Input String Reference)
CUST_TROUBLE_QUEUE	Y	VARCHAR2(10)	Customer trouble queue. Refer to CUST_TROUBLE_ QUEUE for more information. This field contains the name of the work group queue that the event has been referred to. Maps to INC.TROUBLE_QUEUE and JOBS.TROUBLE_QUEUE
DRV_INST	Y	VARCHAR2(180)	Driving instructions. Maps to INC.DRV_INSTR1
EST_REST_TIME	Y	Date	The ERT.
EXTERNAL_ID	N	VARCHAR2(16)	External ID. Refer to EXTERNAL_ID for more information If it is used, its value should be unique. Maps to INC.EXTERNAL_ID and JOBS.EXTERNAL_ID
FUZZY_NCG_CLS	Y	NUMBER	Fuzzy control zone class.
FUZZY_NCG_IDX	Y	NUMBER	Fuzzy control zone index.
GENERAL_AREA	Y	VARCHAR2(32)	General Area. Not Used in the SPL OMS System. Maps to INC.GENERAL_AREA
GROUP_BY_NAME	Y	VARCHAR2(127)	Fuzzy control zone name.
GROUPABLE	Y	NUMBER	Indicates if call is groupable if set to 1. Maps to INC.GROUPABLE
MEET_TIME	Y	DATE	Time of customer meet. Refer to MEET_TIME for more information. Maps to INC.MEET_TIME
MEET_TYPE	Y	NUMBER	Customer meet type. Refer to MEET_TYPE for more information. Maps to INC.MEET_CODE
METER_ID	Y	VARCHAR2(32)	Customer meter number. Maps to INC.METER_ID
RELATED_EVT_APP	Y	NUMBER	Related event application.
RELATED_EVT_CLS	Y	NUMBER	Related event class. Maps to INC. RELATED_CLS
RELATED_EVT_IDX	Y	NUMBER	Related event index. Maps to INC. RELATED_IDX
REPORTED_ERT	Y	DATE	Estimated restoration time reported to caller. Maps to INC. REPORTED_EST_REST_TIME
SHORT_DESC	Y	VARCHAR2(128)	Trouble short description. Maps to INC.SHORT_DESC
TROUBLE_LOC	Y	VARCHAR2(255)	Incident's trouble location. Maps to INC.TROUBLE_LOC

Field Name	Nullable	Data Type	Description (JMS Input String Reference)
UPDATE_EXISTING_INC	Y	NUMBER	Whether to update an existing incident. Refer to UPDATE_EXISTING_ INC for more information.
USER_NAME	Y	VARCHAR2(32)	Call-taker user name. Refer to USER_NAME for more information. Maps to INC.USER_NAME
X_REF	Y	NUMBER	Customer X coordinate. Refer to X_REF for more information. Maps to INC.X_COORD
Y_REF	Y	NUMBER	Customer Y coordinate. Refer to Y_REF for more information. Maps to INC.Y_COORD

TROUBLE_CALLBACKS Table Schema

The TROUBLE_CALLBACKS table contains callback request information that has to be reported to the external application. The table also stores the corresponding callback response received from the external application. The Generic IVR Adapter directly inserts new callback requests to the said table. It also directly picks up processed callbacks from the same table. The external application is provided two stored procedures for indirectly reading and updating callback information from the table.

From the table below, on the 'Description' column, take note that field names prefixed with 'INC.' would come from the INCIDENTS table.

Column Name	Nullable	Data Type	Description
ALTERNATE_PHONE	Y	VARCHAR2(38)	Populated by the Callback Requests Data Flow from INC.ALTERNATE_PHONE.
CALL_TAKER_ID	Y	VARCHAR2(32)	Populated by the Callback Requests Data Flow from INC.USER_NAME.
CALLBACK_DONE	Y	VARCHAR2(1)	Initially populated by the Callback Requests Data Flow as 'N', signifying that the callback is not yet done. As soon as the external application successfully returns the callback response to the Generic IVR Adapter (using pr_trouble_callback_responses stored procedure), the field is updated to 'Y', signifying that the callback has been done. Below is a list of valid values for this field. 'N' - Callback Has Not Been Done 'Y' - Callback Has Been Done The Generic IVR Adapter uses this field as one of the criteria in purging the TROUBLE_CALLBACKS table for 'old' records. Records with CALLBACK_DONE field = 'Y' will be purged.
CALLBACK_EMAIL	Y	VARCHAR2(254)	The callback email
CALLBACK_LATE	Y	VARCHAR2(1)	Populated by the Callback Requests Data Flow from INC.CALLBACK_LATE The possible values are as follows: 'Y' - It is OK to call back even when it is already late. 'N' - It is not OK to call back when it is already late. This information is only passed from the external application to Oracle Utilities Network Management System (using the Trouble Calls Data Flow), and back to the external application (using the Callback Requests Data Flow). No other action is taken.

Column Name	Nullable	Data Type	Description
CALLBACK_LATE_TIME	Y	DATE	Populated by the Callback Requests Data Flow from INC.CALLBACK_TIME. This information is only passed from the external application to Oracle Utilities Network Management System (using the Trouble Calls Data Flow), and back to the external application (using the Callback Requests Data Flow). No other action is taken.
CALLBACK_METHOD	N	number	The callback method requested (1-phone, 2-text, 3-email)
CALLBACK_REASON	Y	VARCHAR2(100)	This is used by the Generic IVR Adapter to indicate the source of the callback request. This will default to 'OMS'.
CALLBACK_STATUS	Y	VARCHAR2(10)	Initially populated by the Callback Requests Data Flow as NULL; The field is repopulated by the external application (using pr_trouble_callback_responses stored procedure). The valid values are as follows: 'F' - Not Restored Callback 'R' - Restored Callback 'N' - Cancel Callback, unable to get a response The Callback Response Data Flow is responsible for sending the updated value to Oracle Utilities Network Management System. A remapped value is placed in INC.CALLBACK_STATUS.
CALLBACK_TEXT	Y	VARCHAR2(32)	The Callback text number
CALLBACK_TIME	Y	DATE	Initially populated by the Callback Requests Data Flow as NULL; The field could be repopulated by the external application (using pr_trouble_callback_responses stored procedure). The stored procedure defaults this field to the system date if no information was supplied by the external application. The Callback Response Data Flow is responsible for sending the updated value to Oracle Utilities Network Management System. The value is placed in INC.CB_CALL_TIME.
CAUSE_CODE	Y	VARCHAR2(32)	This is used to relay back to customers the cause of an outage when a callback is performed. Populated by the Callback Requests Data Flow from JOBS.CAUSE when the useExternalCause rule is set to 'yes' in the SRS_RULES.

Column Name	Nullable	Data Type	Description
CB_DETAIL_1	Y	VARCHAR2(80)	Populated by the Callback Requests Data Flow from a column in the PICKLIST_INFO_UPD_TR database table. Column name is configured in the IVR_ADAPTER_CONFIG database table.
CB_DETAIL_2	Y	VARCHAR2(80)	Populated by the Callback Requests Data Flow from a column in the PICKLIST_INFO_UPD_TR database table. Column name is configured in the IVR_ADAPTER_CONFIG database table.
CB_DETAIL_3	Y	VARCHAR2(80)	Populated by the Callback Requests Data Flow from a column in the PICKLIST_INFO_UPD_TR database table. Column name is configured in the IVR_ADAPTER_CONFIG database table.
CB_DETAIL_4	Y	VARCHAR2(80)	Populated by the Callback Requests Data Flow from a column in the PICKLIST_INFO_UPD_TR database table. Column name is configured in the IVR_ADAPTER_CONFIG database table.
CUSTOMER_ADDRESS	Y	VARCHAR2(255)	Populated by the Callback Requests Data Flow by concatenating INC.ADDR_BUILDING, INC.ADDRESS and INC.ADDR_CITY
CUSTOMER_COMMENT	Y	VARCHAR2(255)	Populated by the Callback Requests Data Flow from INC.OP_COMMENT.
CUSTOMER_COUNT	Y	NUMBER	Populated by the Callback Requests Data Flow from INC.USER_NAME.
CUSTOMER_NAME	Y	VARCHAR2(75)	Populated by the Callback Requests Data Flow from INC.CUSTOMER_NAME.
CUSTOMER_PHONE	Y	VARCHAR2(38)	Populated by the Callback Requests Data Flow from INC.CUSTOMER_PHONE.
EST_REST_TIME	Y	Date	The ERT
EVENT_CLS	Y	NUMBER(38)	Populated by the Callback Requests Data Flow from INC.EVENT_CLS.
EVENT_IDX	Y	NUMBER(38)	Populated by the Callback Requests Data Flow from INC.EVENT_IDX.
EXTERNAL_ID	Y	VARCHAR2(16)	Populated by the Callback Requests Data Flow from INC.EXTERNAL_ID.
INCIDENT_NUMB	N	NUMBER(38)	Populated by the Callback Requests Data Flow from INC.NUMB.

Column Name	Nullable	Data Type	Description
INCIDENT_TIME	Y	DATE	Populated by the Callback Requests Data Flow from INC.INPUT_TIME. The Generic IVR Adapter uses this field as one of the criteria in purging the TROUBLE_CALLBACKS table for 'old' records. The TROUBLE_CALLBACKS table record is 'aged' based on the system date/time and the INCIDENT_TIME field. Any record older than a predefined number of days will be removed. See keepdbinfo on page 1-12 for more information.
OUTAGE_DURATION	Y	NUMBER	Outage duration in seconds. Populated by the Callback Requests Data with the difference between JOBS.RESTORE_TIME and JOBS.BEGIN_TIME.
PREMISE_ID	N	VARCHAR2(64)	Populated by the Callback Requests Data Flow from INC.CID.
PROCESS_STATUS	Y	VARCHAR2(1)	Initially populated by the Callback Requests Data Flow as 'N', signifying that the record is a new callback Once the record was fetched by the external application (using pr_trouble_callback_requests stored procedure), the field is automatically updated by the stored procedure to 'I' signifying that the external system is currently processing the callback response. As soon as the external application successfully returns the callback response to the Generic IVR Adapter (using pr_trouble_callback_responses stored procedure), the field is updated to 'C', signifying that the external application has completed the processing of the callback response. This field is internally maintained by the Generic IVR Adapter. Below is a list of valid values for this field. 'N' - New Callback 'I' - In Processing Of Callback Response 'C' - Completed The Processing Of Callback Response The Generic IVR Adapter uses this field as one of the criteria in purging the TROUBLE_CALLBACKS table for 'old' records. Records with PROCESS_STATUS field = 'C' will be purged.

Column Name	Nullable	Data Type	Description
SHORT_DESCRIPTION	Y	VARCHAR2(128)	Populated by the Callback Requests Data Flow from INC.SHORT_DESC This is the clue (e.g., 'Out') of the incident rather than the trouble code (e.g., '10000000'). 'Out' is short for 'All Power Out'.
TROUBLE_CODE	Y	VARCHAR2(32)	Populated by the Callback Requests Data Flow from INC.COMPLAINT. This is the trouble code (e.g., '10000000') of the incident rather than the clue (e.g., 'Out'). 'Out' is short for 'All Power Out'.

Stored Procedure Parameters

pk_ccb.submit_call

Data structures and parameters of the PK_CCB.SUBMIT_CALL stored procedure:

```
SUBTYPE udf_field IS VARCHAR2(256);
TYPE input_call_rec IS RECORD (
    call_source_id       VARCHAR2(3),
    service_point_id     trouble_calls.cust_id%TYPE,
    external_id          trouble_calls.external_id%TYPE,
    account_number       trouble_calls.cust_key%TYPE,
    trouble_code         trouble_calls.cust_trouble_code%TYPE,
    first_name           trouble_calls.cust_first_name%TYPE,
    last_name            trouble_calls.cust_last_name%TYPE,
    phone                trouble_calls.cust_phone%TYPE,
    phone_area           trouble_calls.cust_phone_area%TYPE,
    alt_phone            trouble_calls.alternate_phone%TYPE,
    priority             trouble_calls.cust_priority%TYPE,
    critical_flag        trouble_calls.cust_critical%TYPE,
    life_support_flag    trouble_calls.cust_life_support%TYPE,
    call_id              trouble_calls.general_area%TYPE,
    call_time            trouble_calls.call_time%TYPE,
    call_comment         trouble_calls.call_comment%TYPE,
    call_taker           trouble_calls.usename%TYPE,
    call_type            trouble_calls.call_type%TYPE,
    addr_building        trouble_calls.addr_building%TYPE,
    addr_street          trouble_calls.addr_street%TYPE,
    addr_cross_street    trouble_calls.addr_street%TYPE,
    addr_city_state      trouble_calls.addr_city%TYPE,
    drive_instr          trouble_calls.drv_inst%TYPE,
    meet_time            trouble_calls.meet_time%TYPE,
    meet_type            trouble_calls.meet_type%TYPE,
    group_by_name        trouble_calls.group_by_name%TYPE,
    device_id            trouble_calls.cust_device_alias%TYPE,
    meter_id             trouble_calls.meter_id%TYPE,
    trouble_queue        trouble_calls.cust_trouble_queue%TYPE,
    trouble_location     trouble_calls.trouble_loc%TYPE,
    x_coord              trouble_calls.x_ref%TYPE,
    y_coord              trouble_calls.y_ref%TYPE,
    appt_type            trouble_calls.appt_type%TYPE,
    appt_time            trouble_calls.appt_time%TYPE,
    appt_range           trouble_calls.appt_range%TYPE,
    callback_flag        trouble_calls.callback_request%TYPE,
```

```
    callback_before_time trouble_calls.callback_time%TYPE,
    callback_late_flag   trouble_calls.callback_late%TYPE,
    intersection_cls     trouble_calls.cust_device_cls%TYPE,
    intersection_idx     trouble_calls.cust_device_idx%TYPE,
    cancel_flag          trouble_calls.cust_call_cancel%TYPE,
    update_flag          trouble_calls.update_existing_inc%TYPE,
    udf1                 udf_field,
    udf2                 udf_field,
    udf3                 udf_field,
    udf4                 udf_field,
    udf5                 udf_field
);
-- new/updated trouble call
PROCEDURE submit_call (
    p_call     IN   input_call_rec,
    p_err_no   OUT  NUMBER,
    p_err_msg  OUT  VARCHAR2
);
```

Description of the parameters of the PK_CCB.SUBMIT_CALL stored procedure.

Parameter Name	Parameter Type	Description
p_call.call_source_id	VARCHAR2(2)	Id unique to the call capture mechanism (always set to 2 for CCB, 3 for IVR - for example), Value will be prefixed to p_call.external_id field in this stored procedure. Used to allow NMS to maintain unique call ids (incidents.external_id) across multiple call taking systems submitting independent (overlapping) sets of external_ids. Generally an integer (to better support Interactive Voice Response systems) - but can be project specific.
p_call.service_point_id	VARCHAR2(64)	Service point id.
p_call.external_id	VARCHAR2(16)	Call external id unique ID from call capture system (CCB). To ensure uniqueness a given NMS implementation needs to agree on a fixed length field (12 characters for example).
p_call. account_number	VARCHAR2(30)	Customer account number.
p_call.trouble_code	VARCHAR2(32)	Call trouble code. Integer passed as a string - each character (0-9) indicates a specific selection (or 0 for non-selection) from each of 1 to 32 different trouble call categories. Project configurable.
p_call.first_name	VARCHAR2(75)	Customer first name or full name (if customer name is passed in a single field).
p_call.last_name	VARCHAR2(75)	Customer last name.
p_call.phone	VARCHAR2(32)	Customer phone number.
p_call.phone_area	VARCHAR2(8)	Customer phone area code.
p_call.alt_phone	VARCHAR2(32)	Alternative/callback phone number.

Parameter Name	Parameter Type	Description
p_call.priority	VARCHAR2(4)	The same value as ces_customers.priority should be passed in. This is used to determine critical customer type.
p_call.critical_flag	VARCHAR2(1)	Critical customer (Y/N)
p_call.life_support_flag	VARCHAR2(1)	Life support flag (Y/N).
p_call.call_id	VARCHAR2(32)	Call identifier (for example, 911 call id) - mapped to *general_area*.
p_call.call_time	DATE	Call capture time from external call capture system
p_call.call_comment	VARCHAR2(255)	Comments
p_call.call_taker	VARCHAR2(32)	Call taker id.
p_call.call_type	VARCHAR2(8)	Call type.
CC&B should leave this field empty.		
p_call.addr_building	VARCHAR2(10)	Building/block number.
p_call.addr_street	VARCHAR2(255)	Street address or name of the first intersection street.
p_call.addr_cross_street	VARCHAR2(255)	Name of the second intersection (cross) street.
p_call.addr_city_state	VARCHAR2(45)	City and (optionally) state.
p_call.drive_instr	VARCHAR2(180)	Driving instructions.
p_call.meet_time	DATE	Meet time.
p_call.meet_type	NUMBER	Meet action code. Possible values: • 0 - for non-meet calls • 1 - create new meet • 2 - reschedule existing meet • 3- cancel existing meet
p_call.group_by_name	VARCHAR2(127)	Optional control zone name for fuzzy calls.
p_call.device_id	VARCHAR2(32)	Device alias.
p_call.meter_id	VARCHAR2(32)	Meter number.
p_call.trouble_queue	VARCHAR2(10)	Trouble queue (Tree Trimming, Underground, etc)
p_call.trouble_location	VARCHAR2(255)	Trouble location.
p_call.x_coord	NUMBER	X coordinate in the NMS electrical network model coordinate system (generally NOT lat/long). If not provided JMService will default to the coordinates for the supply_node from the point_coordinates table.
p_call.y_coord	NUMBER	Y coordinate - match for X coordinate above.

Parameter Name	Parameter Type	Description
p_call.appt_type	NUMBER	Appointment type.
p_call.appt_time	DATE	Appointment time.
p_call.appt_range	NUMBER	Appointment time window in minutes.
p_call.callback_flag	NUMBER	Callback request flag. • 0 - callback has not been requested • 1 - callback has been requested.
p_call.callback_before_time	DATE	Callback requested before this time.
p_call.callback_late_flag	VARCHAR2(1)	Callback late ok flag (Y/N)
p_call.intersection_cls	NUMBER	If p_call.service_point_id is NOT null this field is ignored. If not null and p_call.service_point_d is null interpreted as att_street_intersection.h_cls. Used to help identify an intersection (when paired with p_call.intersection_idx)
p_call.intersection_idx	NUMBER	If p_call.service_point_id is NOT null this field is ignored. If not null and p_call.service_point_id is null interpreted as att_street_intersection.h_idx - to help identify an intersection (when paired with p_call.intersection_cls).
p_call.cancel_flag	VARCHAR2(1)	Call cancel flag (Y/N).
p_call.update_flag	NUMBER	If 0 then this is a new call, otherwise this is an update to an existing call.
p_call.udf1	VARCHAR2(255)	User-defined call field 1.
p_call.udf2	VARCHAR2(255)	User-defined call field 1.
p_call.udf3	VARCHAR2(255)	User-defined call field 1.
p_call.udf4	VARCHAR2(255)	User-defined call field 1.
p_call.udf5	VARCHAR2(255)	User-defined call field 1.
p_err_no	NUMBER	Error code. In case of successful execution 0 is returned.
p_err_msg	VARCHAR2(200)	Internal error message.

pk_ccb.job_history

Stored procedure PK_CCB.JOB_HISTORY allows caller to retrieve list of jobs matching passed in search condition.

The following types of search conditions are supported:

- Search for specific customer by service point id, premise id or account number.
- Location-based search. Search for jobs at or nearby specified location. Location can be street intersection or street segment (block).

- Fuzzy outage search. Search for fuzzy jobs by external id, call identifier, caller name or caller phone.
- Custom search. To use custom search the stored procedure has to be modified by the project. Additional search parameters are passed in the 'p_custom' field.

```
CREATE OR REPLACE TYPE customer_search_obj AS OBJECT (
    serv_point_id        VARCHAR2(64),
    premise_id           NUMBER,
    account_number       VARCHAR2(30)
)

CREATE OR REPLACE TYPE location_search_obj AS OBJECT (
    city                 VARCHAR2(200),
    state                VARCHAR2(30),
    street1              VARCHAR2(200),
    street2              VARCHAR2(200),
    block_number         NUMBER
)

CREATE OR REPLACE TYPE fuzzy_search_obj AS OBJECT (
    external_id          VARCHAR2(200),
    call_id              VARCHAR2(200),
    caller_name          VARCHAR2(200),
    caller_phone         VARCHAR2(200)
)

CREATE OR REPLACE TYPE custom_search_obj AS OBJECT (
    field1               VARCHAR2(200),
    field2               VARCHAR2(200),
    field3               VARCHAR2(200),
    field4               VARCHAR2(200),
    field5               VARCHAR2(200)
)

TYPE nms_cursor IS REF CURSOR;

-- Get job history.
PROCEDURE job_history (
    p_cust           IN  customer_search_obj,
    p_loc            IN  location_search_obj,
    p_fuzzy          IN  fuzzy_search_obj,
    p_custom         IN  custom_search_obj,
    p_num_days       IN  NUMBER,
    p_jobs           OUT nms_cursor,
    p_err_no         OUT NUMBER,
    p_err_msg        OUT VARCHAR2
);
```

Description of the parameters of the PK_CCB.JOB_HISTORY stored procedure.

Parameter Name	Parameter Type	Description
p_cust.serv_point_id	VARCHAR2(64)	Service point id.
p_cust.premise_id	NUMBER	Service location (premise id).
p_cust.account_number	VARCHAR2(30)	Customer account number.
p_loc.city	VARCHAR2(200)	City.

Parameter Name	Parameter Type	Description
p_loc.state	VARCHAR2(30)	State.
p_loc.street1	VARCHAR2(200)	Street name. This field is used in both street intersection search and street segment search.
p_loc.street2	VARCHAR2(200)	Second street name for street intersection search.
p_loc.block_number	NUMBER	Block number for street segment search.
p_fuzzy.external_id	VARCHAR2(200)	Call external id.
p_fuzzy.call_id	VARCHAR2(200)	Call identifier (for example, id for 911 calls).
p_fuzzy.caller_name	VARCHAR2(200)	Caller name.
p_fuzzy.caller_phone	VARCHAR2(200)	Caller phone number.
p_custom.xxx		Implementation-defined search parameters.
p_cmp_days	NUMBER	If greater than 0 then switching plans completed within specified number of days in the past will be returned in addition to current and future switching plans.
p_jobs	nms_cursor	Returned jobs information.
p_err_no	NUMBER	Error code. In case of successful execution 0 is returned.
p_err_msg	VERCHAR2(200)	Internal error message.

For each returned job the following information is included.

```
TYPE job_rec IS RECORD (
    serv_point_id        ces_customers.id%TYPE,
    serv_point_addr      ces_customers.address%TYPE,
    event_idx            jobs.event_idx%TYPE,
    begin_time           jobs.begin_time%TYPE,
    est_rest_time        jobs.est_rest_time%TYPE,
    est_rest_time_source jobs.est_source%TYPE,
    restore_time         jobs.restore_time%TYPE,
    cust_out             jobs.num_cust_out%TYPE,
    comments             jobs.operator_comment%TYPE,
    alarm_state          jobs.alarm_state%TYPE,
    alarm_state_desc     te_valid_states.description%TYPE,
    trouble_location     jobs.display_name%TYPE,
    status               jobs.status%TYPE,
    device_class         jobs.devcls_name%TYPE,
    trouble_code         jobs.trouble_code%TYPE,
    feeder_name          jobs.feeder_name%TYPE,
    cause                jobs.cause%TYPE,
    description          jobs.description%TYPE,
    referral_group       jobs.referral_group%TYPE,
    last_update_time     jobs.last_update_time%TYPE,
    udf1                 udf_field,
    udf2                 udf_field,
    udf3                 udf_field,
    udf4                 udf_field,
    udf5                 udf_field
```

```
);
```

Field Name	Field Type	Description
serv_point_id	VARCHAR2(64)	Service point id.
serv_point_addr	VARCHAR2(200)	Service point address
event_idx	NUMBER	Event index.
begin_time	DATE	Outage begin time.
est_rest_time	DATE	Estimated restoration time (ERT).
est_rest_time_source	VARCHAR2(1)	ERT source. Possible values: • N - no ERT • I - Initial ERT • C - manually entered ERT (from crew or NMS operator) • S - ERT calculated by Storm Management • O - ERT calculated by Storm Management (crew on-site) • P - Non-publisher ERT • G - ERT override is in effect • D - ERT delay is in effect
restore_time	DATE	Outage restoration time.
cust_out	NUMBER	Number of customers affected by the outage.
comments	VARCHAR2(255)	Operator's comment. Note some customers increase this to max allowed (4k).
alarm_state	VARCHAR2(32)	Outage state.
alarm_state_desc	VARCHAR2(80)	Description of the outage state.
trouble_location	VARCHAR2(255)	

Field Name	Field Type	Description
status	NUMBER	Job type. Possible values: • 0 - Fuzzy outage. • 1 - Probable/predicted service outage. • 2 - Probable/predicted device outage. • 3 - Real service outage. • 4 - Real device outage. • 7 - Non-outage. • 8 - Critical meet. • 9 - Future meet. • 10 - Confirmed service outage. • 11 - Confirmed secondary outage. • 13 - Probable/predicted momentary outage. • 14 - Real momentary outage. • 15 - Planned outage. • 16 - Non-electric event. • 17 - Master switching job. • 18 - Fault current event.
device_class	VARCHAR2(32)	Outage device class name (e.g., fuse)
trouble_code	VARCHAR2(128)	Trouble code.
feeder_name	VARCHAR2(32)	Feeder name.
cause	VARCHAR2(32)	Outage cause.
description	VARCHAR2(128)	Job description.
referral_group	VARCHAR2(32)	Referral group.
last_update_time	DATE	Timestamp of the latest update to the outage record.
udf1	VARCHAR2(255)	Job user-defined field 1.
udf2	VARCHAR2(255)	Job user-defined field 2.
udf3	VARCHAR2(255)	Job user-defined field 3.
udf4	VARCHAR2(255)	Job user-defined field 4.
udf5	VARCHAR2(255)	Job user-defined field 5.

pk_ccb.call_history

Stored procedure PK_CCB.CALL_HISTORY will allow caller to retrieve list of calls matching search condition.

Following types of search conditions will be supported:

- Search for calls for a specific customer by service point id, premise id or account number.
- Location-based search. Search for calls at or nearby specified location. Location can be street intersection or street segment (block).
- Fuzzy outage search. Search for fuzzy calls by external id, call identifier, caller name or caller phone.

Custom search. To use custom search the stored procedure has to be modified by the project. Additional search parameters are passed in the 'p_custom' field.

```
PROCEDURE call_history (
    p_cust           IN  customer_search_obj,
    p_loc            IN  location_search_obj,
    p_fuzzy          IN  fuzzy_search_obj,
    p_custom         IN  custom_search_obj,
    p_num_days       IN  NUMBER,
    p_calls          OUT nms_cursor,
    p_err_no         OUT NUMBER,
    p_err_msg        OUT VARCHAR2
);
```

For each returned call the following information is included.

```
-- call history record
TYPE call_rec IS RECORD (
    external_id          incidents.external_id%TYPE,
    call_id              incidents.general_area%TYPE,
    serv_point_id        incidents.cid%TYPE,
    call_time            incidents.input_time%TYPE,
    address              incidents.address%TYPE,
    short_desc           incidents.short_desc%TYPE,
    comments             incidents.op_comment%TYPE,
    call_taker           incidents.user_name%TYPE,
    cust_name            incidents.customer_name%TYPE,
    status               incidents.active%TYPE,
    udf1                 udf_field,
    udf2                 udf_field,
    udf3                 udf_field,
    udf4                 udf_field,
    udf5                 udf_field
);
```

Field Name	Field Type	Description
external_id	VARCHAR2(16)	Call external id.
call_id	VARCHAR2(32)	Call identifier (for example, id for 911 calls).
serv_point_id	VARCHAR2(64)	Service point id.
call_time	DATE	Call time.
Address	VARCHAR2(255)	Address for the call.

Field Name	Field Type	Description
short_desc	VARCHAR2(256)	Trouble code.
Comments	VARCHAR2(255)	Comments.
call_taker	VARCHAR2(32)	Call taker id.
cust_name	VARCHAR2(75)	Customer/caller name.
Status	VARCHAR2(1)	Call status. Possible values (other values can exist in NMS but they would not be returned by this procedure):"Y - active call "N - inactive/restored call "C - canceled call "E - call belongs to canceled job
udf1	VARCHAR2(255)	Call user-defined field 1.
udf2	VARCHAR2(255)	Call user-defined field 2.
udf3	VARCHAR2(255)	Call user-defined field 3.
udf4	VARCHAR2(255)	Call user-defined field 4.
udf5	VARCHAR2(255)	Call user-defined field 5.

pk_ccb.switching_history

The stored procedure PK_CCB.SWITCHING_HISTORY allows a caller to retrieve a list of current, future, and (optionally) past switching plans affecting a given customer.

```
PROCEDURE switching_history (
    p_cust          IN  customer_search_obj,
    p_custom        IN  custom_search_obj,
    p_num_days      IN  NUMBER,
    p_sw_plans      OUT nms_cursor,
    p_err_no        OUT NUMBER,
    p_err_msg       OUT VARCHAR2
);
```

Description of the parameters of the PK_CCB.SWITCHING_HISTORY stored procedure.

Parameter Name	Parameter Type	Description
p_cust.serv_point_id	VARCHAR2(64)	Service point id.
p_cust.premise_id	NUMBER	Service location (premise id).
p_cust.account_number	VARCHAR2(30)	Customer account number.
p_custom		Implementation-defined search parameters.
p_sw_plans	nms_cursor	Returned switching plan information.
p_err_no	NUMBER	Error code In case of successful execution 0 is returned.
p_err_msg	VARCHAR2(200)	Error message.

For each returned switching plan following information is included.

```
-- switching plan record
TYPE switching_plan_rec IS RECORD (
    plan_class           swman_sheet_cls.switch_sheet_type%TYPE,
    plan_number          swman_sheet.switch_sheet_idx%TYPE,
    start_date           swman_sheet.start_date%TYPE,
    end_date             swman_sheet.finish_date%TYPE,
    device_alias         swman_sheet.device_alias%TYPE,
    state                te_valid_states.state_name%TYPE,
    work_district        swman_sheet_extn.string_value%TYPE,
    work_location        swman_sheet_extn.string_value%TYPE,
    work_description     swman_sheet_extn.string_value%TYPE,
    serv_point_id        ces_customers.id%TYPE,
    serv_point_addr      ces_customers.address%TYPE,
    udf1                 udf_field,
    udf2                 udf_field,
    udf3                 udf_field,
    udf4                 udf_field,
    udf5                 udf_field,
    udf6                 udf_field,
    udf7                 udf_field,
    udf8                 udf_field,
    udf9                 udf_field,
    udf10                udf_field
);
```

Field Name	Field Type	Description
plan_class	VARCHAR2(32)	Switching plan type (planned, emergency, ….).
plan_number	NUMBER	Switching plan number.
start_date	DATE	Switching plan start date.
end_date	DATE	Switching plan end date.
State	VARCHAR2(32)	Switching plan state.
work_district	VARCHAR2(500)	
work_location	VARCHAR2(500)	
work_description	VARCHAR2(500)	
serv_point_id	VARCHAR2(64)	Service point id.
serv_point_addr	VARCHAR2(200)	Service point address

pk_ccb.trouble_code_config

Stored procedure PK_CCB.TROUBLE_CODE_CONFIG allows caller to retrieve list of trouble codes configured in the Oracle Utilities Network Management System.

```
PROCEDURE trouble_code_config (
    p_trouble_codes  OUT nms_cursor,
    p_err_no         OUT NUMBER,
    p_err_msg        OUT VARCHAR2
);
```

Field Name	Field Type	Description
p_trouble_codes	nms_cursor	Returned trouble code information.
p_err_no	NUMBER	Error code In case of successful execution 0 is returned.
p_err_msg	VARCHAR2(200)	Error message

For each returned trouble code following information is included:

```
-- trouble code configuration record
TYPE trouble_code_rec IS RECORD (
    group_name          srs_trouble_codes.group_name%TYPE,
    group_order         srs_trouble_codes.group_order%TYPE,
    code_name           srs_trouble_codes.code_name%TYPE,
    code_num            srs_trouble_codes.code_num%TYPE,
    short_desc          srs_trouble_codes.short_desc%TYPE,
    description         srs_trouble_codes.description%TYPE
);
```

Field Name	Field Type	Description
group_name	VARCHAR2(20)	Trouble code group name
group_order	NUMBER	Trouble code group order
code_name	VARCHAR2(40)	Trouble code name
code_num	NUMBER	Trouble code number within its group
short_desc	VARCHAR2(25)	Short description of the trouble code
description	VARCHAR2(70)	Long description of the trouble code

pr_trouble_calls

The Generic IVR Adapter provides the pr_trouble_calls procedure to be used by the external application to insert trouble calls in the TROUBLE_CALLS table. Refer to Trouble Calls on page 1-3 for Data Flow details.

Below is a high level description of what is done inside the stored procedure

- Upon invoking the stored procedure, the p_premise_id parameter is used to query the CES_CUSTOMERS table (via the SERV_LOC_ID field) to retrieve the ACCOUNT_NUMBER, H_CLS and H_IDX fields of the said table. The value of these fields is placed in the corresponding columns of the TROUBLE_CALLS table.
- Other parameter values are inserted to corresponding fields on the TROUBLE_CALL table.
- Several TROUBLE_CALLS columns will have default value when no parameter value is supplied.
- Should there be an error in the record insert, an Oracle error is returned.

> **Note**: If the given premise id has multiple accounts associated with it, only one account (i.e., the first account) is used.

Below are details about each parameter of the pr_trouble_calls stored procedure. Note that the field name column indicates the corresponding column that is populated in the TROUBLE_CALLS table.

Parameters

Parameter	Direction	Data Type	Field Name	Comment
p_premise_id	In	VARCHAR2	PREMISE_ID	The value is inserted as is.
p_trouble_code	In	VARCHAR2	TROUBLE_CODE	Defaults to '1' followed by a certain number of '0'. If no value was supplied. The total length of the string is the total number of distinct groups in the SRS_TROUBLE_CODES table.
p_callback_ind	In	VARCHAR2	CALLBACK_INDICATOR	The possible values are as follows: '0' - callback not requested '1' - callback requested Defaults to '1' if no value is supplied. 'Y' is translated to '1'. 'N' is translated to '0'.
p_call_time	In	DATE	CALL_TIME	Defaults to the database system date if no value is supplied
p_call_taker_id	In	VARCHAR2	CALL_TAKER_ID	The value is inserted as is.
p_alternate_phone	In	VARCHAR2	ALTERNATE_PHONE	The value is inserted as is.
p_customer_comment	In	VARCHAR2	CUSTOMER_COMMENT	The value is inserted as is.
p_customer_phone	In	VARCHAR2	CUSTOMER_PHONE	The value is inserted as is.
p_customer_name	In	VARCHAR2	CUSTOMER_NAME	The value is inserted as is.
p_customer_address	In	VARCHAR2	CUSTOMER_ADDRESS	The value is inserted as is.

Parameter	Direction	Data Type	Field Name	Comment
p_customer_city_state	In	VARCHAR2	CUSTOMER_CITY_STATE	The value is inserted as is.
p_customer_priority	In	VARCHAR2	CUSTOMER_PRIORITY	The value is inserted as is.
p_external_id	In	VARCHAR2	EXTERNAL_ID	The value is inserted as is.
p_device_alias	In	VARCHAR2	DEVICE_ALIAS	The value is inserted as is.
p_check_cutoff_ind	In	VARCHAR2	CHECK_CUTOFF_IND	The possible values are as follows: 'Y' - check if the customer is disconnected 'N' - do not perform checking. Defaults to 'N' if no value is supplied
p_callback_late_ind	In	VARCHAR2	CALLBACK_LATE_IND	The possible values are as follows: 'Y' - It is OK to call back even when it is already late. 'N' - It is not OK to call back when it is already late. Defaults to 'N' if no value is supplied
p_callback_before_time	In	DATE	CALLBACK_BEFORE_TIME	The value is inserted as is.
p_trouble_queue	In	VARCHAR2	TROUBLE_QUEUE	The value is inserted as is.
p_meter_id	In	VARCHAR2	METER_ID	The value is inserted as is.
p_supply_id	In	NUMBER	SUPPLY_ID	The value is inserted as is.
p_cust_phone_area	In	VARCHAR2	CUST_PHONE_AREA	The value is inserted as is.
p_cust_last_name	In	VARCHAR2	CUST_LAST_NAME	The value is inserted as is.
p_general_area	In	VARCHAR2	GENERAL_AREA	The value is inserted as is.
p_cust_order_num	In	VARCHAR2	CUST_ORDER_NUM	The value is inserted as is.
p_drv_inst	In	VARCHAR2	DRV_INST	The value is inserted as is.
p_cust_life_support	In	VARCHAR2	CUST_LIFE_SUPPORT	The value is inserted as is.
p_cust_call_cancel	In	VARCHAR2	CUST_CALL_CANCEL	The value is inserted as is.
p_short_desc	In	VARCHAR2	SHORT_DESC	The value is inserted as is.
p_addr_building	In	VARCHAR2	ADDR_BUILDING	The value is inserted as is.
p_meet_time	In	DATE	MEET_TIME	The value is inserted as is.
p_meet_type	In	NUMBER	MEET_TYPE	The value is inserted as is.
p_groupable	In	NUMBER	GROUPABLE	The value is inserted as is.
p_clue	In	NUMBER	CLUE	The value is inserted as is.
p_combine_pri	In	NUMBER	COMBINE_PRI	The value is inserted as is.
p_cust_status	In	NUMBER	CUST_STATUS	The value is inserted as is.

Parameter	Direction	Data Type	Field Name	Comment
p_cust_intr_x	In	NUMBER	CUST_INTR_X	The value is inserted as is.
p_cust_intr_y	In	NUMBER	CUST_INTR_Y	The value is inserted as is.
p_cust_intersect_cls	In	NUMBER	CUST_INTERSECT_CLS	The value is inserted as is.
p_cust_intersect_idx	In	NUMBER	CUST_INTERSECT_IDX	The value is inserted as is.
p_cust_intersect_ncg	In	NUMBER	CUST_INTERSECT_NCG	The value is inserted as is.
p_update_existing_inc	In	NUMBER	UPDATE_EXISTING_INC	The value is inserted as is.
p_fuzzy_ncg_cls	In	NUMBER	FUZZY_NCG_CLS	The value is inserted as is.
p_fuzzy_ncg_idx	In	NUMBER	FUZZY_NCG_IDX	The value is inserted as is.
p_group_by_name	In	VARCHAR2	GROUP_BY_NAME	The value is inserted as is.
p_cust_critical	In	VARCHAR2	CUST_CRITICAL	The value is inserted as is.
p_related_evt_cls	In	NUMBER	RELATED_EVT_CLS	The value is inserted as is.
p_related_evt_idx	In	NUMBER	RELATED_EVT_IDX	The value is inserted as is.
p_related_evt_app	In	NUMBER	RELATED_EVT_APP	The value is inserted as is.
p_x_ref	In	NUMBER	X_REF	The value is inserted as is.
p_y_ref	In	NUMBER	Y_REF	The value is inserted as is.
p_call_type	In	VARCHAR2	CALL_TYPE	The value is inserted as is.
p_cust_phone_update	In	VARCHAR2	CUST_PHONE_UPDATE	The value is inserted as is.
p_trouble_loc	In	VARCHAR2	TROUBLE_LOC	The value is inserted as is.
p_appt_type	In	VARCHAR2	APPT_TYPE	The value is inserted as is.
p_appt_time	In	DATE	APPT_TIME	The value is inserted as is.
p_appt_range	In	NUMBER	APPT_RANGE	The value is inserted as is.
p_cust_device_ncg	In	NUMBER	CUST_DEVICE_NCG	The value is inserted as is.
p_cust_device_partition	In	NUMBER	CUST_DEVICE_PARTITION	The value is inserted as is.
p_err_premise_id	Out	VARCHAR2	VARCHAR2(80)	The erroneous premise ID input parameter
p_err_oracle_error	Out	VARCHAR2	VARCHAR2(80)	Oracle's error message.

Note: The pr_trouble_calls stored procedure does not require a call status parameter from the user to insert in the TROUBLE_CALLS stored procedure. Each time the stored procedure inserts trouble calls in the TROUBLE_CALLS table, the CALL_STATUS field is always 'N', signifying that it is a new trouble call.

pr_trouble_callback_requests

Below is a high level description of what is done inside the stored procedure

- From the TROUBLE_CALLBACKS table, a list of new callback requests is created. These are the TROUBLE_CALLBACKS records whose PROCESS_STATUS field is 'N' (New) and CALLBACK_DONE field is 'N' (No).
- The list is captured within the stored procedure as a database cursor and returned to the calling application.
- The PROCESS_STATUS field of the records in the list is updated from 'N' (New) to 'I' (In Progress).

Note: Refer to the Data Flow Steps of the Callback Requests Data Flow on how the TROUBLE_CALLBACKS table is populated.

Parameter

Parameter	Direction	Cursor
p_callback_requests	In/Out	CALLBACK_CURSOR

Cursor Definition

Below are the fields of the CALLBACK_CURSOR. Take note that the CALLBACK_CURSOR is defined as a weakly typed cursor.

Field Name from the Cursor	Data Type	Field Name from TROUBLE_CALLBACKS	Comments
EVENT_CLS	NUMBER(38)	TCB.EVENT_CLS	Event class
EVENT_IDX	NUMBER(38)	TCB.EVENT_IDX	Event index
INCIDENT_NUMB	NUMBER(38)	TCB.INCIDENT_NUMB	Incident number
PREMISE_ID	VARCHAR2(50)	TCB.PREMISE_ID	Premise id
CUSTOMER_NAME	VARCHAR2(75)	TCB.CUSTOMER_NAME	Customer name
CUSTOMER_PHONE	VARCHAR2(38)	TCB.CUSTOMER_PHONE	Customer phone
CUSTOMER_ADDRESS	VARCHAR2(255)	TCB.CUSTOMER_ADDRESS	Customer address
ALTERNATE_PHONE	VARCHAR2(38)	TCB.ALTERNATE_PHONE	Customer alternate phone number
TROUBLE_CODE	VARCHAR2(32)	TCB.TROUBLE_CODE	This is the trouble code (e.g., '10000000') of the incident rather than the clue (e.g., 'Out'). 'Out' is short for 'All Power Out'.
SHORT_DESCRIPTION	VARCHAR2(128)	TCB.SHORT_DESCRIPTION	This is the clue (e.g., 'Out') of the incident rather than the trouble code (e.g., '10000000'). 'Out' is short for 'All Power Out'.
CUSTOMER_COMMENT	VARCHAR2(255)	TCB.CUSTOMER_COMMENT	Call-taker Comments. Comments provided by the customer or call-taker about the incident.
INCIDENT_TIME	DATE	TCB.INCIDENT_TIME	Input time of call. The input time of the incident.

Field Name from the Cursor	Data Type	Field Name from TROUBLE_CALLBACKS	Comments
EXTERNAL_ID	VARCHAR2(16)	TCB.EXTERNAL_ID	Unique call identifier. The unique identifier for the incident.
CALL_TAKER_ID	VARCHAR2(32)	TCB.CALL_TAKER_ID	Call-taker user name. The name of the call-taker or interface that created the call.
CALLBACK_LATE	VARCHAR2(1)	TCB.CALLBACK_LATE	The possible values are as follows: 'Y' - It is OK to call back even when it is already late. 'N' - It is not OK to call back when it is already late.
CALLBACK_LATE_TIME	DATE	TCB.CALLBACK_LATE_TIME	
CALLBACK_REASON	VARCHAR2(100)	TCB.CALLBACK_REASON	This will default to 'OMS'.
CAUSE_CODE	VARCHAR2(32)	TCB.CAUSE_CODE	Cause code of the event related to the callback.

pr_trouble_callback_responses

Below is a high level description of what is done inside the stored procedure

- Upon receiving the input parameter values, the stored procedure verifies if either the p_incident_numb input parameter or the p_external_id input parameter was supplied. If both were supplied, the p_incident_numb parameter takes precedence.
- The stored procedure validates if the p_callback_status input parameter has a valid value. The valid values are 'F' (not restored), 'R' (restored) and 'N' (cancel callback).
- The stored procedure verifies that there is a unique combination of p_incident_numb and p_premise_id OR a unique combination of p_external_id and p_premise_id on the TROUBLE_CALLBACKS table, whichever among p_incident_numb or p_external_id was supplied.
- The TROUBLE_CALLBACKS table is updated for the p_incident_numb and p_premise_id combination OR the p_external_id and p_premise_id combination. The following fields are updated:
  - The callback's CALLBACK_DONE field to 'Y' signifying that the callback was already done.
  - The callback's CALLBACK_TIME field with provided p_callback_time stored procedure parameter. CALLBACK_TIME field defaults to the system date if no value was provided.
  - The callback's CALLBACK_STATUS field with the appropriate callback response code.
- Should any of these steps fail, the stored procedure exits and returns the appropriate error.

  Note: Refer to the Data Flow Steps of the Callback Response Data Flow on how the TROUBLE_CALLBACKS table is populated.

Parameters

Parameter	Direction	Data Type	Field Name	Comments
p_incident_numb	In	NUMBER	INCIDENT_NUMB	Incident Number. Either this or the p_external_id parameter has to be supplied
p_external_id	In	VARCHAR2	EXTERNAL_ID	External Id. Either this or the p_incident_numb parameter has to be supplied
p_premise_id	In	VARCHAR2	PREMISE_ID	Premise Id.
p_callback_status	In	VARCHAR2	CALLBACK_STATUS	The valid values are as follows: 'F' - Not Restored Callback 'R' - Restored Callback 'N' - Cancel Callback, unable to get a response
p_callback_time	In	DATE	CALLBACK_TIME	Defaulted to the system date if no value was supplied
p_err_incident_numb	Out	NUMBER		The erroneous incident number input parameter
p_err_external_id	Out	VARCHAR2		The erroneous external ID input parameter
p_err_premise_id	Out	VARCHAR2		The erroneous premise ID input parameter
p_err_oracle_error	Out	VARCHAR2		Oracle's error message

pr_customer_event_details

The Generic IVR Gateway provides the pr_customer_event_details stored procedure that gives the event details of an outage given the customer premise. Refer to the data flow detail for Callback Requests on page 1-5.

Below is a high level description of what is done inside the stored procedure.

- The stored procedure tries to get the latest event for the given premise ID (p_in_premise_id input parameter).

Parameters

Below are details about each parameter of the pr_customer_event_details stored procedure.

Parameter	Direction	Data Type	Comments
p_in_premise_id	In	VARCHAR2	Premise ID input parameter with a corresponding entry in CES_CUSTOMERS.SERV_LOC_ID
p_out_event_class	Out	NUMBER	Event class output parameter
p_out_event_index	Out	NUMBER	Event index output parameter
p_out_outage_status	Out	VARCHAR2	This is an abbreviation of the current state of the event, for instance, 'NEW', 'ASN', 'CMP', etc.
p_ out_outage_start_time	Out	DATE	The time of the lead call of the job.

Parameter	Direction	Data Type	Comments
p_ out_first_dispatch_time	Out	DATE	The time the first crew was dispatched
p_ out_est_restore_time	Out	DATE	The last estimate of restoration time.
p_ out_est_restore_time_src	Out	VARCHAR2	The source of the ERT of the event. Possible values are as follows: 'N' - none (no ERT) 'S' - Storm Management 'P' - Storm Management "non-published global ERT" 'O' - Storm Management "onsite ERT" 'G' - Storm Management "published global ERT" D' - Storm Management "published global ERT delay" 'C' - User-entered (assumed to have been provided by the crew) 'I' - Initial default ERT 'M' - Storm Management ERT is further in the future then allowed
p_ out_crew_arrival_time	Out	DATE	The time when the crew arrived on location
p_ out_completion_time	Out	DATE	The time the event has been completed. This implies power restoration, the crew(s) are gone, and the event is completed in the Event Details window.
p_ out_restoration_time	Out	DATE	The time that power has been restored.
p_ out_case_note	Out	VARCHAR2	Comment
p_ out_status	Out	NUMBER	Condition status
p_ out_active	Out	VARCHAR2	Possible values are as follows: 'Y' - Outage Is Active 'N' - Outage Is Not Active
p_out_alias	Out	VARCHAR2	The device alias.
P_out_event_type	Out	VARCHAR2	Possible values are as follows: OUT NON MEET PLAN SWP
P_out_feeder_name	Out	VARCHAR2	The name of the feeder.
P_out_cause	Out	VARCHAR2	The cause of the outage if the SRS Rule useExternalCause is on.

Parameter	Direction	Data Type	Comments
P_out_num_calls	Out	NUMBER	The number of calls.
P_out_num_cust_out	Out	NUMBER	The number of customers out.
P_err_premise_id	Out	VARCHAR2	
P_err_oracle_error	Out	VARCHAR2	

SRSInput Testing Utility Command Line Options

SRSInput adds raw file incidents into JMService.

Usage

SRSinput [-ami][-ami_up] [-max number] [-ivr] [-time] [-blanksok] [-package number]
[-interval seconds] [-divide number] [-tilde] [-debug]
-input filename

Options/Arguments:

Option	Description
-ami	Submit AMI Last Gasp (Power Down) inputs for the meters specified by the -input parameter.
-ami_up	Submit AMI Power Up (Restore) inputs for the meters specified by the -input parameter.
-max number	Maximum number of calls to enter.
-ivr	Write calls to trouble_calls table for IVR adapter.
-time	Add input_time with current time.
-blanksok	Blank lines in call record are acceptable.
-package number	Number of calls to send to JMS at a time. Default: 10.
-interval seconds	Seconds to delay between calls.Defaults to 5. Also, it can take floating point values such as 2.5 to sleep 2 and a half seconds between call batches.
-divide number	Number to divide <WAIT> times by.
-tilde	Use the tilde in column 0 as a call separator.
-debug	Enable runtime debugging.
-input filename	Filename containing trouble call data. **Required**.

Note: If the -ivr option is not used, SRSinput sends calls to JMService via the C++ API.

Terminology

The following terms and acronyms are relevant to this specification

OMS	Outage Management System
NMS	Network Management System
CIS	Customer Information System
IVR	Interactive Voice Response
Generic IVR Adapter	A Unix application that generally executes on the OMS server machine. It supports the Trouble Call, Callback Request, and Callback Response Data Flows.
SMService	System Monitor Service. SMService monitors the core processes in the system, essentially the services and interfaces.
JMService	Job Management Service. The Oracle Utilities Network Management System call processing and outage prediction engine.

ODService	Object Directory Service. ODService improves performance of the Oracle Utilities Network Management System by caching large amounts of device information that is likely to be requested by applications. This caching allows the requests to be handled very quickly without directly accessing the database.
Isis	Clients access services and tools through a central concurrency management and messaging system called Isis. Isis is a real-time implementation of message oriented middleware and comprises the backbone of the system, providing access to the server for each client and the communication required between tools and services. Isis delivers the organized information to the client applications.

Chapter 2

Smallworld GIS Adapter Template

The Oracle Smallworld data adapter template is a Smallworld Magik code template for an extraction tool to produce .mp files from the Smallworld GIS. This unsupported template is provided as an example for projects to use to facilitate the extraction from the Smallworld GIS to the Oracle Utilities Network Management System (NMS). It is located on the installed Oracle Utilities Network Management System in the $NMS_BASE/sdk/gis directory as file SW_EXTRACTOR_TEMPLATE.zip.

Chapter 3

ESRI ArcGIS Adapter

Adapter Overview

Oracle Network Management System has adapters for various ESRI ArcGIS systems. Please refer to http://support.oracle.com and search the Oracle Support Knowledge Base for "NMS ESRI Extractor" for information on supported versions of the adapter and download links.

Adapter Documentation

Oracle Utilities Network Management System ArcGIS adapter documentation is included in the ArcGIS adapter release package.

Chapter 4

Intergraph G/Electric Adapter

Adapter Overview

Oracle Utilities Network Management System has adapters for various Intergraph G/Electric systems. Please refer to http://support.oracle.com and search the Oracle Support Knowledge Base for “NMS Intergraph Extractor” for information on supported versions of the adapter and download links.

Adapter Documentation

Oracle Utilities Network Management System Intergraph G/Electric adapter documentation is included in the Intergraph G/Electric adapter release package.

Chapter 5

Generic IBM MQ Mobile Adapter

This chapter includes the following topics:

- Introduction
- Functional Description
- Adapter Installation
- Design Overview
- Configuration
- DML Reference
- Event Object Fields

Introduction

This document describes the Generic IBM MQ Mobile Adapter that can be used by Oracle Utilities Network Management System customers to exchange data with external mobile data systems using IBM MQ messages formatted using XML. The reader is assumed to have a working-level knowledge of Oracle Utilities Network Management System mobile data systems, XML, and IBM MQ technologies.

Overview Description

Integration of Oracle Utilities Network Management System to a mobile data system involves the implementation of an adapter process, which exchanges messages with a mobile data system (MDS). The contents of messages sent to the MDS are generated from data obtained from the Oracle Utilities Network Management System services, transformed so that they are suitable for the MDS, and formatted into XML. The contents of messages received from the MDS are extracted from XML, transformed so that they are suitable for Oracle Utilities Network Management System, and sent to the Oracle Utilities Network Management System services.

The current implementation of the adapter supports the exchange of the following types of messages:

- Messages sent to the MDS
    - MDS order creation, update and cancellation messages, triggered by Event updates from Oracle Utilities Network Management System.

    - Interface communication status verification messages, triggered on a periodic basis.
- Messages received from the MDS
    - MDS order update and completion messages, which trigger updates to the corresponding Oracle Utilities Network Management System events.
    - Crew log on, update, and log off messages, which trigger Oracle Utilities Network Management System crew creation, update, and de-activation.
    - Crew assignment creation, update, and deletion messages, which trigger status changes to the corresponding Oracle Utilities Network Management System crews and events.
    - Interface communication status verification messages, which trigger changes to the interface status.

Terminology

The following terms and acronyms are relevant to this specification

InterSys	The middleware infrastructure that supports Oracle Utilities Network Management System
MDS	A Mobile Data System that exchanges data with field crews' mobile data terminals.
MDS Order	A document or unit of work on the MDS. Also known under different names (for example, "Job").
Event	Oracle Utilities Network Management System outage and non-outage events are generated by SRS based on customer calls and changes to the Oracle Utilities Network Management System topology model.
SRS	Service Reliability System, the service within InterSys that analyzes and manages outages.
IBM MQ	A queue-based messaging system developed by IBM.
XML	Extensible Markup Language
DML	Dynamic Message Language. This language is used to configure the adapter.

Functional Description

The purpose of this section is to describe the basic functional capabilities of the Generic IBM MQ Mobile Adapter, as applied to the integration of Oracle Utilities Network Management System with mobile data systems (MDS). While a high-level graphical description is provided here, detailed descriptions are provided in subsequent sections.

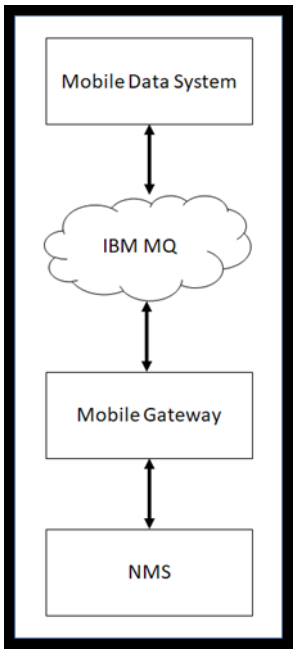

Functional Requirements

The key requirements for the current implementation of the Generic IBM MQ Mobile Adapter are:

- Generation of MDS orders based on Oracle Utilities Network Management System events.
- Updates of MDS orders based on changes to Oracle Utilities Network Management System events.
- Updates to Oracle Utilities Network Management System events based on updates to MDS orders.
- Creation and update of crew information based on changes to crews on the MDS.
- The ability to map multiple events to a single MDS order, based on event relationships in Oracle Utilities Network Management System. This allows groups of events to be viewed as single units of work on the MDS. An example of this is multiple events involved in a set of partial restoration steps.
- The capability to send individual field changes to an order when events change so that there is a minimum usage of the limited bandwidth available to transmit data to and from field crews. This requires storing the data last sent to the MDS so that change detection can be used. This data is saved to the database, so that change detection can be used over an adapter shutdown and restart.
- The ability of data from various Oracle Utilities Network Management System sources to be transformed and combined for transmission to the MDS. The data sources include the Oracle Utilities Network Management System services and the database. Data from the Oracle Utilities Network Management System services will be obtained from both asynchronous notification messages and the use of API calls.
- The ability of data from the MDS to be transformed and sent to various Oracle Utilities Network Management System destinations, using database updates and API calls.

Hardware and Software Requirements

The purpose of this section is to describe the environment relevant to this interface.

Oracle Utilities Network Management System Environment

The Oracle Utilities Network Management System environment consists of a number of servers that are interconnected using the InterSys messaging system.

Adapter Server

The Generic IBM MQ Mobile Adapter environment may be resident on the same servers as the Oracle Utilities Network Management System services, or it may be implemented on a separate server. Specifications for a stand-alone adapter server:

- All Oracle Utilities Network Management System Unix and Linux operating systems are supported
- IBM MQ messaging product

  Notes:

  - Queues may reside on a remote machine.
  - See the *Oracle Utilities Network Management System Licensing Information User Manual* for the IBM MQ version requirements.
- A LAN connection to the Oracle Utilities Network Management System server must be available
- Isis must be installed and configured

Oracle Utilities Network Management System Server

The Oracle Utilities Network Management System server environment is typically deployed on one or more Unix or Linux servers configured with the following:

- Unix/Linux operating system
- Oracle RDBMS with Oracle Utilities Network Management System model
- Oracle Utilities Network Management System service processes
- LAN connection to adapter server
- Message queues to be used by the MQ/XML Adapter appropriately declared in the defined database configuration table.
- Isis

External System Environment

The external system is any system that can exchange information with Oracle Utilities Network Management System through an adapter. The environment of the external system has the following capabilities:

- Any operating system which supports IBM MQ messaging
- IBM MQ messaging product
- Applications that can request or publish information in a manner which is either directly or indirectly (through a translator) compliant with the XML specifications contained within this document via queues
- Queues must be pre-configured
- IBM MQ Integrator can be used as needed for routing and translation.

Required Installed Software

The following lists the required software that needs to be installed prior to any configuration of the Oracle Utilities Network Management System Generic IBM MQ Mobile Adapter.

- IBM MQ
- Isis (included in the base Oracle Utilities Network Management System installation)

  Note: Isis is the messaging backbone for Oracle Utilities Network Management System and will already be present on any Network Management System servers. If the Generic IBM MQ Mobile Adapter is to be executed on a separate server than the Network Management System, then that server must also have Isis installed and running. Every server installation must be running the same version of Isis. The CMM_CELL environment variable must be set the same on any servers which are to communicate through Isis.

-

Adapter Installation

Overview

This section is used to guide the user in the installation of the Oracle Utilities Network Management System Generic IBM MQ Mobile Adapter. The following are assumed to be true before the adapter is installed:

1. Oracle Utilities Network Management System is installed and functional. This means that database access has been confirmed, as well as Isis message bus communication.
2. IBM MQ is installed on a machine that is accessible to the Oracle Utilities Network Management System.

Check if the Generic IBM MQ Mobile Adapter is installed

Verify that the following files are found in their respective folders

- $NMS_BASE/bin/mdsgateway
- $NMS_BASE/bin/nms-mds-gateway

Configure Adapter to Run as NMS System Service

Configure the Generic IBM MQ Mobile Adapter to run as an Oracle Utilities Network Management System service by updating the `$NMS_HOME/etc/system.dat` file to include the Generic IBM MQ Mobile Adapter as a system service. There are 3 main sections where this service needs to be defined: the service, program and instance sections.

See the `$NMS_BASE/templates/system.dat.template` file for examples of how to configure the Generic IBM MQ Mobile Adapter. Search for "`mdsgateway`" in the file and copy those lines to `$NMS_HOME/etc/system.dat` file. Make sure all lines are uncommented so that they are active.

See the command line options section below for more details on available options. You must restart the system services in order to the Generic IBM MQ Mobile Adapter to properly be monitored by SMService.

Note: In setting up `$NMS_HOME/etc/system.`dat, it is important to note that the examples above were presented only for illustration purposes. Parameters may differ on an actual project setting. Coordinate

with your Project Engineer in setting up your system configuration file. Also, take note that in the example above, it is assumed that the Generic IBM MQ Mobile Adapter will reside on the same machine where the Oracle Utilities Network Management System environment resides.

Generic IBM MQ Mobile Adapter Command Line Options

The command line for the Generic IBM MQ Mobile Adapter provides the following options:

- **-debug <level>:** Output debug messages to the log from the adapter and all API toolkits.
- **-dl:** Output level zero (fewest) debug messages from the adapter, only, to the log. (Note that this is the letter 'l').
- **-d1**: Output level one and lower debug messages from the adapter, only, to the log. (Note that this is the number '1').
- **-d2:** Output level two and lower debug messages from the adapter, only, to the log.
- **-d3:** Output level three and lower debug messages from the adapter, only, to the log.
- **-relog <relog time in hours>:** The relog period in hours. The log file continues to grow as the adapter runs. This can potentially fill up a disk. To avoid this, the adapter has the facility to close the log file, save it in the logs directory and open a new log file. This can be achieved using the "relog" high level message, and/or by specifying a relog time in this command line option. The default is 24 hours. Specifying a relog period of zero disables periodic relogging.
- **-dbserver <database server name>:** Specify the database server to use. The adapter can be a heavy user the database. To prevent it from having an impact on other users and to prevent other users from having an impact on it, it can be configured to use its own database server. The default is to use the normal DBService. To configure the use of its own database server, use this command line option, and make sure that an instance of DBService is running with the database server name as its –service command line option.
- **-waitfor <service name>:** The name of a service to wait for before beginning initialization. It is highly recommended that the adapter waits for the database server it uses. The default is DBService. If the –dbserver option is used, this option should be set to the name that the instance of DBService has been given in its process_name option. Specifying the empty string as the name disables this feature
- **-maxwaitfor <time in seconds>:** The maximum time to wait for the service the adapter waits for before beginning initialization. If the service does not respond within this time, the adapter exits with a fatal error message. The default is 120 (two minutes).
- **-dmldir <directory path>:** The path of the directory that contains the configuration files (.dml files). The full path of the directory should be specified.

Any other command line arguments are assumed to be file names of configuration files to use. They are processed in the order that they appear in the command line. If the adapter is being run as a Service, the full path name of the files should be specified.

Optionally Configure the Adapter to Run with Another Instance of DBService

In `$NMS_HOME/etc/system.dat`, include the MQDBService as one of the services. Use the TCDBService entries as examples of how to set this up.

> **Note**: If using a separate DBService, you must start the Generic IBM MQ Mobile Adapter with the "-custdbsname" command line parameter and use the MQDBService name as the argument.

Configure the IBM MQ Server

1. Create a new Queue Manager named NMS_MGR.A.
2. Make NMS_MRG.A the default queue.
3. From NMS_MRG.A, create two new local queues:
   - NMS.A.FROMNMS
   - NMS.A.TONMS
4. Create a server connection channel (SCH1) in NMS_MGR.A. The MCA User ID is the local login userid.
5. Start the server connection channel.
6. Create a new queue manager listener service.
7. Stop the original default queue manager listener and set it to not start automatically.
8. Create a new queue manager listener for NMS_MGR.A. It should be configured to start automatically. Start the queue manager listener.

Configure the MQ Client

Set Environment Variables

The environment configuration file (nms.rc), which is a data file listing Oracle Utilities Network Management System environment settings, should have the following:

```
export MQSERVER=[ServerConnectionChannelName]/TCP/
[MQ_Server_IP_Address or hostname]\(port number\)
```

For example:

```
export MQSERVER=SCH1/TCP/10.115.3.85
```

- If required for your environment, the configuration file must also have two variables set to locate the .TAB file for IBM MQ. The .TAB must be copied to the MQ client from the MQ server host as specified by these variables.

  Examples:

  ```
  export MQCHLLIB=/users/proj/MQ
  export MQCHLTAB=AMQCLCHL.TAB
  ```

Testing the Connections

Once the server and client are configured, you can test the connections.

1. Test the server connection channel (`amqscnxc`).
2. Test putting a message (`amqsputc`) using the NMS.A.FROMMNS local queue.
3. Test getting a message from the server (`amqsgetc`) using the NMS.A.TONMS local queue.

Configure Queues for Required Data Flows

All incoming (with respect to NMS) data flows would go through the NMS.A.TONMS queue. All outgoing messages would go through the NMS.A.FROMNMS queue. Additionally, an error queue is intended for all adapter generated error messages.

These queues must be added to the DML configuration with the following parameters:

```
config_QueueManager_name
config_OutQueue_[id]_name
config_InQueue_[id]_name
```

where `[id]` is a unique identifier to differentiate between multiple output or input queues.

Design Overview

The adapter passes data between Oracle Utilities Network Management System and the MDS, transforming the data based on the configuration files and tables. Messages sent and received using MQSeries are formatted in XML. The types of messaging that are supported include the following:

- Asynchronous publish from Oracle Utilities Network Management System to MDS (using 'fire and forget' pattern)
- Asynchronous publish from MDS to Oracle Utilities Network Management System (using 'fire and forget' pattern)
- Request/reply from Oracle Utilities Network Management System to MDS (the requestor can process this either synchronously or asynchronously)
- Request/reply from MDS to Oracle Utilities Network Management System (the requestor can process this either synchronously or asynchronously)

There are a number of mobile data systems produced by various vendors. These systems allow the end customer to specify the contents of orders that are sent to the crews and the various ways that the crews can report on their progress of their work in the field. In addition, crews can request information from the dispatcher and from other systems in the customer's organization. The number of options and capabilities vary between the mobile data system vendors.

Oracle Utilities Network Management System allows the end customer a large number of options in the kinds of data that are associated with different kinds of objects, including customers, customer calls, outage and non-outage events, field crews, and devices in the network model.

This implies that an adapter that interfaces between Oracle Utilities Network Management System and multiple mobile data systems and multiple implementations of Oracle Utilities Network Management System and the various individual mobile data systems has to be highly configurable.

To meet this challenge, the Oracle Utilities Network Management System IBM MQ Mobile Adapter can be configured to perform data manipulations and business logic, for flexibility, and has functions commonly used interfacing between Oracle Utilities Network Management System and mobile data systems hard coded for performance.

Configuration Concepts

The core of the configuration is one or more file(s) written in Dynamic Message Language (dml). This language allows the adapter to dynamically generate XML messages from various data sources, and to process XML messages to distribute the data contained in the message to various data sinks.

DML allows data to be textually transformed and combined, has logic to allow XML elements to be included or ignored, and different InterSys API calls to be made, all depending on the data being processed.

The basic units in dml are known as documents. There are two main types of document:

- Output Documents: These instruct the adapter how to generate XML documents to be sent to the MDS. For example, an Output Document is used to generate order create and update messages.

- Input Documents: These instruct the adapter how to process the data received in XML documents from the MDS. For example, an Input Document instructs the interface how to process a crew creation message.

One or more dml files are read by the adapter during initialization. The contents of these files are compiled into a hierarchical set of internal data structures. As the various documents are triggered, the internal data structures are used to generate outgoing XML messages and process incoming XML documents.

The details of the syntax and capabilities of dml are described below in paragraph DML Files on page 5-13 and in the Appendices.

Output Documents

An Output Document gathers data from various sources, performs all necessary data transformations and logic, and formats the resulting data into XML elements whose tags are specified in the Output Document. The main sources of data are asynchronous InterSys messages, database selections, data cached in the adapter from previous XML documents, both input and output, and InterSys API calls.

In order to have the resulting XML document generated, the Output Document has to be activated. This activation is known as "triggering" Output Documents. These triggers occur under the following circumstances:

- The reception of an InterSys message. For example, an update to an event from SRS could trigger an order update message.
- Periodically. For example, an interface status message that produces a reply from the MDS to monitor the state of the connection between the two systems.
- By request in another document. For example, an assignment message is received from the MDS, but Oracle Utilities Network Management System has no record of the specified crew. In this case the Input Document processing the assignment message could trigger a query to the MDS, asking it to return the data describing the crew.
- When event relationships change. For example when a number of events are grouped manually on the Work Agenda.

Input Documents

Input Documents process data from elements whose tags are specified in the Input Document. Other elements are ignored. Once the data from all tags in the message that the Input Document recognizes are gathered, all necessary data transformations are performed, possibly in conjunction with data from other sources, and the results are passed to various data sinks. The main data sinks are the database, InterSys API calls, and the adapter cache for use in later document processing.

In order for Input Documents to process the appropriate incoming XML documents, Input Documents have selection criteria. These criteria specify one or more of the following conditions that have to be met before the Input Document is used to process the data in the XML document:

- The tag and attributes of the XML document's root element.
- One or more element tags that are required to be in the XML document to identify its usage. Optional elements can be processed with the required elements. Facilities are available to set optional elements to default values, or to alter the processing logic depending whether they are present or not.
- The queue that the XML document was received on.

Integration with System Services

In order for the various dml documents to access Oracle Utilities Network Management System service objects, a number of facilities are available. They include:

- Asynchronous notification messages. For example, SRSoutput messages that describe new or modified events. DML documents can access the data supplied by these messages.
- Access to the database. DML documents can read data from the database using select statements, and can write data using insert and update statements.
- Access to the service APIs. Service APIs relevant to objects used in interfacing to mobile data systems are available to dml documents using function calls.

Aggregation of Objects

Oracle Utilities Network Management System and mobile data systems perform very distinct functions and, therefore have distinct views of a utility. This leads to different object models. The difference that has the major impact on the integration of the two is what appears to be the same object on each side of the interface: events and orders.

Events are associated with particular devices in the electrical network, while orders describe work to be done in the field. Normally, one event is associated with one order, for example when a customer transformer needs to be replaced because of a fault. However, in more complex situations, this one-to-one relationship no longer applies.

An example of this is the series of steps involved in a partial restoration. A typical scenario is presented below:

1. A fault occurs in an underground loop, causing the fuse protecting the loop to blow.
2. This results in an outage event on the fuse.
3. This generates an order, which is sent to a crew in the field.
4. The crew arrives on site and discovers that an underground cable has been cut at the end of the loop opposite from the fuse.
5. In order to restore power to as many customers as possible, the crew opens the switch closest to the cut cable, and then replaces the fuse.
6. This creates a new outage event associated with the downstream switch.
7. The event associated with the fuse remains, but is now in a restored state.

If a one-to-one relationship were maintained between orders and events, there would now be a new order associated with the downstream switch. However, this does not match the view of the crew in the field. The new event is merely part of the work involved in servicing the original order.

To accommodate this, the adapter will aggregate partial restoration events, if the appropriate configuration options are chosen, into what appears as a single event to the dml. The dml can then process the aggregate event into a single order. Similarly, when the dml processes updates to an order sent by the MDS, causing updates to the aggregate event, the adapter applies the updates to all of the aggregated events in Oracle Utilities Network Management System.

Another example is when the Oracle Utilities Network Management System operator wants to group related events, for example when multiple outages occur in an ice storm in a small area, and assign them to a single crew. The adapter can be configured to treat this in the same way as a partial restoration, but this is not necessarily the preference of the customer. Some mobile data systems can group orders into a folder like object. The adapter can provide a trigger to the dml to process the group of associated events appropriately.

Information Flows

The contents of the configuration files are driven by the information flows required for a particular customer.

Performance

This interface is intended to provide for high performance needed to process frequent message exchange such as in the case of a high volume of events during a storm. In order to provide optimum performance, there are aspects of both implementation and usage. Aspects of usage include:

- Reducing the number of database accesses and API calls required to generate outgoing XML documents and to process incoming XML documents.
- Reducing the number of elements that need to be sent and received.
- Keeping the number of critical elements that cause XML documents to be sent when they change to as low a number as possible.
- Allowing events time to group for as long as possible, before they cause the creation of orders and cancellation of orders for grouped calls. An example of this is to wait until an event is acknowledged before creating the order, and implementing business practices that delays the acknowledgment until the event is ready to be processed by the MDS.
- Sending multiple requests and updates from the MDS together in a single message.

Aspects of implementation which optimize performance include:

The assumption that incoming XML messages are well formed, bypassing the validation step. It is assumed that the sender provided well-formed XML, which was transmitted using reliable communication mechanisms. The actual validation test is whether or not the code that internally parses a message can extract a sufficient set of parameters to process an Input Document. XML that is not well formed will typically generate an error. It should also be noted that XML validation does not necessarily guarantee valid information provided by an external system. If this generates an error in the adapter, the error will be logged.

High Level Messages

High-level messages are typically used within Oracle Utilities Network Management System to permit one process to control another process. There are no special high-level messages that would be required for the Generic IBM MQ Mobile Adapter.

Note that doing an Action any.any stop will stop the adapter, which needs to be taken into consideration for administering the adapter when starting and stopping it.

Supported high level messages include the following:

- debug <debug level>: set the global debug level to <debug level>. If no level is supplied, toggle between 0 and 1.
- dl <arg>: modify the local mdsadapter debug level depending on arg
  - (none): toggle between 0 and 1
  - off: turn off debug (no messages)
  - on: set to 0 (lowest level above off, least messages)
  - (a number): set to number (the higher the more debug messages)
- dump: dump adapter data to the log
- isisdump: request an isis dump

- report
- stop
- relog: close the current log file, save it in the logs directory, and open a new log file
- trigger <document name> <trigger name> [<arg> …]: Trigger the specified OnRequest trigger in the specified Output Document passing all the additional arguments to the document. If the document name, trigger name, or the number of arguments is invalid, the adapter exits due to a configuration error.

Information Models

The key objects supported by the adapter include:

- Incidents are typically related to a customer and are generated by trouble calls. The customer in turn is related to a device. In the absence of a correlation to a device, a trouble call is classified as a 'fuzzy' call, which differentiates it from a call that can be directly correlated to the electrical distribution network.
- Events are a consequence of the correlation of incidents. Outages are one form of an event that is managed by JMService. Some events are non-outage events, such as power quality. The type of call that is provided can identify such non-outage and outage events. Each call needs to be identified with a trouble code, which will determine the type of call that JMService will generate within Oracle Utilities Network Management System.
- Devices, which are part of the electrical distribution network. Customers, outages and conditions may have relationships to devices. Typically customers are related to transformer devices. Outages are typically related to switch, fuse or transformer devices.
- Crews, who work in the field that can be made up of one or more crew members, and one or more vehicle.
- MDS orders, which contain data relevant to the work that the crews perform in the field.

Configuration

There are several mechanisms used to configure this interface:

- DML files
- Database tables
- Command line options

Once the dml files and configuration tables for a customer's initial configuration have gone into production, a knowledgeable user can make changes to the configuration, as business needs change. For example:

- Change element tags and attribute names in input and output messages.
- Remove obsolete elements and attributes.
- Add new elements and attributes.
- Change the format and contents of elements and attributes in output messages.
- Change the transformation of data in input messages.
- Alter business logic.

- Change the contents of the tables that translate Oracle Utilities Network Management System values to and from equivalent values in the messages to and from the MDS.
- Change the conditions that trigger the various messages sent to the MDS.
- Alter the names of the MQSeries queue manager and queues.

The adapter needs to be restarted for configuration changes to take effect.

DML Files

DML files contain dml code that is compiled into internal data structures during initialization. Any errors in the dml files are logged, with the file names and line numbers that the errors were detected on. Any such errors cause initialization to fail. There is an off-line program that allows dml files to be checked before use.

A narrative about the various facilities is provided here. The details of the syntax and capabilities of dml are described below in the Appendices.

The main purpose of dml is to generate and process XML elements. The first few sections describe the generation of XML from Output Documents, but most of the facilities described can be used in Input Documents, which process XML. The discussion of Input Documents starts at section Input Elements and Attributes on page 5-18.

Output Elements and Attributes

In the following dml statement:

```
&Hello = world;
```

- **&** identifies that the following string (**Hello**) is an element tag.
- **=** assigns the element data.
- **world** is a constant value.
- **;** terminates the statement.

Resulting in the following element:

```
<Hello>world</Hello>
```

Optionally, to include a namespace prefix, add the namespace and a separator (**^**) before the local element tag. For example, adding the namespace prefix **mds** to the previous statement:

```
&mds^Hello = world;
```

generates the element

```
<mds:Hello>world</mds:Hello>
```

Similarly, the statement:

```
&Tag < attr1=1; attr2=two; > = "";
```

- **< >** enclose a list of attributes and their values.
- **""** is an empty string.

generates the following empty element with two attributes:

```
<Tag attr1="1" attr2="two"/>
```

The statements:

```
&Tag < attr1=1; attr2=two; >
{
   &SubTag1=SubData1;
   &SubTag2=SubData2;
}
```

- **{}** enclose a list of sub-elements.

generates the following element having two attributes and two sub-elements:

```
<Tag attr1="1" attr2="two">
   <SubTab1>SubData1</SubTab1>
   <SubTab2>SubData2</SubTab2>
</Tag>
```

External Data

So far, the elements and attributes discussed have contained only constant data. An example reading data from an event in an SRSoutput message is:

```
&EventDevice=$E.devAlias;
```

This assigns the alias (name) of the event's interrupting device to the element tagged 'EventDevice'. The '$' indicates that the following string is the name of an external data object. The 'E' indicates that the data is associated with an event object, the '.' separates the components of the name, and the 'devAlias' identifies the data field within the object. The names used for the fields of an event object are similar to the names of the corresponding fields in the Oracle Utilities Network Management System SRSoutput class.

Data obtained this way can be combined with other data using dml operators. For example:

```
&ExternalId = "NMS:" + $E.outageHdl.idx;
```

concatenates the constant string 'NMS:' (contained within quotes because of the non-alphanumeric character ':'), with the event's index (sometimes known as the Ticket Number). Assuming that the event's index was 1234, the following element would be generated:

```
<ExternalId>NMS:1234</ExternalId>
```

Variables

Sometimes the same data is to be assigned to more than one element, or intermediate result is to be used in more than one element. Variables are used to hold such intermediate results. For example:

```
@eid = "NMS:" + $E.outageHdl.idx;
&ExternalId = @eid;
&code = @eid + "%" + $E.devAlias;
```

would generate, assuming the device name was XFM1234567,

```
<ExternalId>NMS:1234</ExternalId>
<code>NMS:1234%XFM1234567</code>
```

The '@' indicates that the following string is the name of a variable. The '+' operator concatenates the string to the right with the string to the left.

SQL Select Statements

A SQL Select statement is used to read data from the database. For example, the statement:

```
sqlselect @type, @intDev | type_om, interrupt_dev_om |
picklist_info_upd_tr | "where ref_id=" | $E.outageHdl.idx;
```

sets variables 'type' and 'intDev' to the values in the 'type_om' and 'interrupt_dev_om' columns of the row in the 'picklist_info_upd_tr' table where the 'ref_id' column matches the current event's index.

The 'sqlselect' introduces the SQL select statement, and is followed by a list of variables that will be set to the contents of the columns in the database, separated by commas, and terminated by a vertical bar (|) as a separator. After the variables is a list of the columns to assign to the respective variables, separated by commas, and terminated by a vertical bar. The number of column names must match the number of variables. The column names are followed by the table or view name. The rest of the statement builds the 'where clause', by concatenating the values of all the remaining components. This syntax only supports a simple select syntax. More complicated select statements are built as a view on database tables, which the dml then accesses using this simpler syntax.

The table name can be a constant or the value of a variable, an external data field, a function call, or the result of the data manipulations, as described below.

If the table name is a constant, the columns are checked for validity at initialization time. If any of the columns specified are not in the table, an error message is output to the log, and initialization fails.

If the table name is not a constant, the columns are checked for validity at run time. If the table does not exist, all variables are set to their default values (described below), and, optionally, a debug message is output to the log. If a column is missing, the variable for the column is set to its default value, and, optionally, a debug message output to the log.

An important source of data relating to devices in the model is the facilities (or attribute) tables associated with various device classes (types). The name of the table for a device class is supplied by the 'classTable' function, which queries the Oracle Utilities Network Management System services for the table's name. Not all facilities tables have the same columns (for example fuses and transformers may have fuse sizes, while reclosers may not). This is the reason that the adapter does not regard a missing column at run time as a fatal error.

Some tables, for example the facilities tables described above, contain data that does not change very often, and can be regarded as remaining static. In this case, values only need to be read from these tables when the table name, or 'where clause' changes. Such tables are declared static by use of the '`static`' keyword. For example:

```
sqlselect @devPhases,        @fuseSize |
          phase_designation, fuse_size |
static classTable($E.devHdl.cls) | "where h_idx = " | $E.devHdl.idx;
```

reads the 'phase_designation' and 'fuse_size' columns for the interrupting device for an outage.

If the select returns no rows, the variables are set to their default values. If the select statement returns one or more rows of the table, the values are taken from the first row returned. Subsequent rows are ignored in the initial implementation of the adapter.

Function Calls

Function calls have a number of uses, including:

- Making Oracle Utilities Network Management System API calls.
- Performing data manipulations not supported by the dml syntax.
- Accessing the adapter's data.
- Accessing other configuration data.

A simple example of truncating external data to 100 characters to match the length of strings expected by the MDS is:

```
&Address = substring($E.dispAddress, 0, 100);
```

the Address element is assigned 100 characters of the 'dispAddress' field from SRSoutput, starting at the beginning of the string (an offset of zero).

The various functions available are described in DML Function Calls on page 5-69.

Expressions

The values of the various data sources can be combined in expressions. Examples of the string concatenation operator '+' have been shown above. The other operators in the initial implementation involve boolean or logical values.

Boolean values are either true or false. Any non-empty string is considered true, while the empty string is false. Boolean operators return 'Y' when they evaluate to true and the empty string when false. The boolean operators are:

- The equality operator '==': This compares two values for textual equality. For example `abc == ab` has a value of `""` (false).
- The inequality operator '!=': This compares two values for textual inequality. For example `abc != abc` has a value of `""` (false).
- The logical AND operator '&&': This is the union of two values, and has a value of true if and only if both values are true. For example, `Y && Y` has a value of Y (true).
- The logical inclusive OR operator '||': This is the intersection of two values, and has a value of true if either of the values is true. For example, `@v1 || Y` has a value of Y (true) whatever the value of the variable v1.
- The logical NOT operator '!': This inverts a single value, being true if the value is false, and vice versa. For example `!@v1` is exactly equivalent to `@v1 == ""`.

Boolean values can be used directly, when the Y or "" is appropriate, or in the alternation operator, described here, or by if statements, described below.

The alternation operator returns the value of one of two expressions, depending on the value of a boolean expression and takes the form:

```
@bool ? @vtrue : @vfalse
```

If '@bool' is true, the expression's value is that of '@vtrue', and if '@bool' is false, the value is that of '@vfalse'.

Operator Summary

In the table below, each operator is followed by its name and an example of its use.

Operator	Description	Example
!	Not	`!@bool`
+	Concatenate	`"NMS:" + $E.outageHdl.idx`
==	Equal	`@v1 == @v2`
!=	Not equal	`@v4 != on`
&&	Logical AND	`@b1 && @b2`
||	Logical inclusive OR	`@b3 || @b4`
? :	Alternation	`@bool ? @vtrue : @vfalse`

The not operator is right associative, all the others are left associative. For example, `!!@v` means `!(!@v)`, and `@v1 + @v2 + @v3` means `(@v1 + @v2) + @v3`, and `@v1 == @v2 == @v3` means `(@v1 == @v2) == @v3`.

Each box holds operators with the same precedence. An operator has a higher precedence than those in lower boxes. For example, `@v1 == @v2 + @v3` means `@v1 == (@v2 + @v3)`.

Parentheses can be used to change the precedence. For example, `(@v1 == @v2) + abc` would result in "Yabc" if @v1 was the same as @v2, otherwise "abc", while `@v1 == @v2 +`

abc would result in "Y" or "" depending on whether the value of v1 is the same as the value of v2 concatenated with "abc".

Parentheses should be used whenever the precedence is in doubt, especially when a boolean expression becomes more complex.

Input Elements and Attributes

The element statements described above in section 7.1 are used in Output Documents. Elements in Input Documents do not have values assigned to them, as the element values are supplied by the incoming XML. An example of an input element follows:

```
&JobNumber;
```

This defines an element whose tag is **JobNumber**. This element is optional (*i.e.*, it does not have to be present in the input XML for the enclosing Input Document to be processed). In addition, no attributes were declared for the element; therefore, any attributes for the element in the input XML will be ignored.

When parsing the input, XML namespace prefixes are ignored; only the local name of a tag in the input XML is used to match the tag to an element in the enclosing Input Document. Consequently, in order to match, elements in Input Documents should not specify namespace prefixes.

If the element is not present in the input XML, its value is the element's default. The specification of default values is described below. In this example, the default is "", the empty string. If special processing should take place when an element is present or not, the boolean function 'isSet' can be used to alter the processing logic using, for example, an 'if' statement, described below.

The value of the element can be used in assignments, expressions, and in the various SQL statements. For example:

```
@jobNo = &JobNumber;
```

assigns the element's value to the variable 'jobNo'.

To declare that an element is required for the Input Document to be processed, the required flag 'R' would be added to the declaration, as described below in section Flags on page 5-21.

An example of an element with four sub-elements is:

```
&CrewKey
{
&CrewName;
&AgencyCode;
&ShiftCode;
&ShiftDate;
}
```

The default way to obtain the value of a sub-element is to specify parent's tag, followed by a forward slash ('/'), followed by the sub-elements tag. Deeper nesting of elements is similar. For example:

```
@crewId = &CrewKey/CrewName + &CrewKey/AgencyCode + &CrewKey/ShiftCode
+      &CrewKey/ShiftDate;
```

If the nesting is very deep, it can become very tedious and error prone to have to type all the tags leading to a particular element. This can be avoided by giving the element a name, as described in section Alternate Names on page 5-23.

Input attributes are declared similarly to Output Document element attributes. For example:

```
&Elem < attr1; attr2; >;
```

declares an element with a tag of 'Elem', with two attributes 'attr1', and 'attr2'.

The value of an attribute can be obtained as follows:

```
@val = &Elem<attr2>;
```

The attribute's name is enclosed in angle brackets '<' and '>'.

SQL Insert and Update Statements

SQL Insert and Update statements are used to save data to the database. For example, the statement:

```
sqlinsert picklist_completion_log |
       ref_id,       who,     reason_for_update,  when |
       $O.event.idx, @crewId, @reason_for_update, time();
```

inserts a row into the 'picklist_completion_log' table. The value of the 'ref_id' column is supplied by the index of the Handle held in the 'event' field of the external object 'O' (Order), that is associated with a particular MDS Order. The value of the 'who' and 'reason_for_update' columns are supplied by the variables 'crewId' and 'reason_for_update'. The 'when' column is supplied by the 'time' function, which returns the current time in internal format.

The 'sqlinsert' introduces the SQL insert statement, and is followed by the table or view name, followed by a vertical bar (|) as a separator. The list of column names follows, separated by commas, and terminated by a vertical bar. The list of data sources follow, separated by commas, and terminated by the statement terminator, ';'. The number of sources must match the number of columns.

The table name or a data source can be a constant or the value of a variable, an element, an external data field, a function call, or the result of an expression.

If the table name is constant, the columns are checked for validity at initialization time. If any of the columns specified are not in the table, an error message is output to the log, and initialization fails.

If the table name is not constant, the columns are checked for validity at run time. If the table does not exist, nothing is sent to the database, and, optionally, a debug message is output to the log. If a column is missing, the data for the column is not sent to the database, and, optionally, a debug message output to the log.

The type and length of the columns are read from the database, the first time a table is accessed (commonly at initialization time). Values for character columns (CHAR or VARCHAR2) are truncated to the column length. Values for NUMBER and FLOAT columns are checked for validity, and invalid numbers are set to NULL. Values for DATE columns are assumed to be in the internal time format and are checked for validity and set to NULL if invalid. Invalid column values are output to the log file.

The SQL Update statement is for use in tables with a set of key columns. If there is a row with the keys set to the values used in the statement, that row is updated. If there is no row with the same keys, the row is inserted.

For example:

```
sqlupdate picklist_info_upd_tr |
       system_om, type_om, crew_restore |
       &System,   &Type,   @restoredTime |
       ref_id | $O.event.idx;
```

ensures that there is a row in the 'picklist_info_upd_tr' table with a 'ref_id' column equal to the outage's event index, and sets the 'system_om', 'type_om', and 'crew_restore' columns

to the values in the 'System' element, 'Type' element, and 'restoredTime' variable, respectively.

The 'sqlupdate' introduces the SQL update statement, and is followed by the table or view name, followed by a vertical bar (|) as a separator. The list of non-key column names follows, separated by commas, and terminated by a vertical bar. The list of non-key data sources follow, separated by commas, and terminated by a vertical bar. The number of non-key sources must match the number of non-key columns. The list of key column names follows, separated by commas, and terminated by a vertical bar. The list of key data sources follow, separated by commas, and terminated by the statement terminator, ';'. The number of key sources must match the number of key columns.

The set of rules for Update statements is the same as described above for Insert statements above, except that nothing is written to the database if a key column is missing.

If Statement

If statements are used to alter the flow of document processing, allowing elements to be generated optionally in output XML, different tables to be updated depending on data in incoming XML, etc. For example:

```
if (@doctype != create)
{
   # there is no job number until the reply to the create document is
received
   &JobNumber = $O.externalId;
}
```

The statements between the brackets '{' and '}' are only processed when the variable 'doctype' does not contain the string "create".

An if statement can also have an 'else' clause. For example:

```
if (@v1 == @v2)
{
   logDebug(0, "v1 is " , @v1, " as is v2");
}
else
{
   logDebug(0, "v1 is ", @v1, " and v2 is ", @v2);
}
```

An if statement can have any number of 'elseif' clauses, optionally followed by an 'else' clause. For example:

```
if (@a == 1)
{
   logDebug(0, "a is 1");
}
elseif (@a == 2)
{
   logDebug(0, "a is 2");
}
else
{
   logDebug(0, "a is ", @a, " neither 1 nor 2");
}
```

```
'else if' (two words) can be substituted for 'elseif'.
```

'if' statements can contain nested 'if' statements, for example:

```
if (@a == 1)
```

```
{
    if (@b == 1)
    {
    logDebug(0, "a is 1, b is 1");
    }
    else
    {
    logDebug(0, "a is 1, b is ", @b);
    }
}
elseif (@a == 2)
{
    if (@b == 1)
    {
    logDebug(0, "a is 2, b is 1");
    }
    else
    {
    logDebug(0, "a is 2, b is ", @b);
    }
}
else
{
logDebug(0, "a is ", @a, ", b is ", @b);
}
```

Flags

Flags are used to modify the behavior of elements, attributes and variables. Flags are set by adding a flag specification to the entity's definition. Individual flags have a flag character, used in flag specifications.

The flags are:

- The 'send on change' flag 'S'. This flag only applies to elements, attributes and triggers in Output Documents. It is described below in sections Change Detection on page 5-24 and Triggers on page 5-30.
- The 'always include' flag 'I'. This flag only applies to elements and attributes in Output Documents. It is described below in section Change Detection on page 5-24.
- The 'don't save' flag 'D'. This flag only applies to elements and attributes in Output Documents. It is described below in section Change Detection on page 5-24.
- The 'ignore attribute changes' flag 'A'. This flag only applies to elements in Output Documents. It is described below in sections Change Detection on page 5-24.
- The 'default to current' flag 'C'. This applies to elements, attributes and variables in Output Documents. Normally when the source of an assignment fails (due to the unavailability of an incident, for example) the element, attribute or variable is set to its default (described below). If this flag is on, the previous value is used instead. This only has effect when change detection (see below) is in effect.
- The 'required' flag 'R'. This flag applies only to elements and attributes in Input Documents. If this flag is set, the element or attribute must be present in the input XML for the Input Document to process the XML. If an attribute is required, the element itself is implicitly required.

Flags are set by adding a flag specification after the name in an element, attribute or variable declaration. For example:

```
&Elem:CSI = $E.devAlias;
```

The flag specification is the ':' followed by one or more flag characters.

All elements and attributes have definitions. However, variables do not have to be. They are implicitly defined when they are assigned in an assignment statement and in a SQL select statement. Such implicit definitions cannot have flag specifications. An example of a variable definition with a flag specification is:

```
@var:C;
```

Defaults

There are cases when the values for an element, attribute or variable are not available. In this case the values are set to the entity's default.

Values are not available in the following cases:

- When an optional element is not present in input XML.
- When insufficient incidents are associated with an event.
- When a table name is dynamically set, for example a device's facility table, and a column is referenced that the table does not contain.
- When a sqlselect statement selects no rows.
- A function call cannot generate a value, perhaps because it needs to use an external object that is not available. The specific situations are discussed in the function reference section of DML Function Calls on page 5-69.

If no default is specified, and the 'default to current' flag is not set, the default value for an entity is "", the empty string. The 'default to current' flag is discussed above in Flags on page 5-21.

A default is specified by adding a default specification to the entity's definition, after its (possibly empty) flag specification. For example:

```
&CallerName::None = $I.0.getCustomerName;
```

This normally sets the 'CallerName' element to the name of the first customer that called. If the event has no incidents, the element's value is set to 'None'. In this case the flag specification ':' is empty, and is followed by the default specification ':None'. If a change to the element 'CallerName' causes an update, the 'S' flag is included in the flag specification:

```
&CallerName:S:None = $I.0.getCustomerName;
```

This time the flag specification is ':S' and the default specification remains ':None'.

Alternate Names

Alternate names can be given to elements, attributes, and variables. Their usage depends on the type of Document the entities are in.

Input Documents

In Input Documents, only elements can have alternate names. They are used to give the elements names, which are easier to use when the element is a deeply nested sub-element. For example:

```
&Grandparent
{
   &Parent
   {
      &son:::Jim<jattr1;>;
      &daughter;
   }
}
```

Declares an element 'Grandparent' with one sub-element 'Parent', which has, in turn, two sub-elements 'son' and 'daughter'. 'son' has a name of 'Jim'. The following example accesses the value of 'daughter':

```
@dval = &Grandparent/Parent/daughter;
```

while accessing the value of 'son' uses the shorter and less error prone:

```
@sval = &Jim;
```

To obtain the value of the attribute of 'son':

```
@sattr = &Jim:<jattr1>;
```

When an element has a name, the long form cannot be used.

Output Documents

In Output Documents elements, attributes, and variables can have alternate names. They have two usages:

- To allow other documents to set their values, for example using the function 'setDocValue', which needs the alternate name.

  An example of this is when an order contains the estimated time of restoration (ETR), which is initially supplied by the Oracle Utilities Network Management System services. Subsequently, the field crew, after assessing the situation in the field, decides that this time is inappropriate and sends a message back. This message causes input XML to be sent to the adapter, which will then be processed in an Input Document. The document contains an API call to set the ETR in Oracle Utilities Network Management System to this value.

  The ETR value in Oracle Utilities Network Management System now matches the ETR value in the MDS. However, the Output Document holds the value of all elements of the order sent to the MDS, to prevent unnecessary updates, and, in this example, will hold the ETR previously sent to the MDS.

  The consequence of this situation is that the next time the event associated with the order changes, the Output Document will be triggered and a change to the ETR will be detected, even if no other elements have changed. This will cause an unnecessary transmission of an order update to the MDS.

The solution to this defeating of the change detection mechanism is to call 'setDocValue' with the new value, and the name of the element that contains the estimated time of restoration. Similar situations can arise for attributes and variables.

- To uniquely name elements so that their values can be saved to the database so that change detection can continue to be effective over a adapter shutdown/restart cycle. This is further discussed in section MDS_ORDER_VALUE on page 5-41.

  The name is specified in an alternate name specification following the (possibly empty) flag specification, and (possibly empty) default specification. For example:

  ```
  &ETR:S:"No ETR":etr = formatDateTime($E.estRestTime);
  ```

  This defines an element with the 'S' flag set, with a default of 'No ETR', and an alternate name of 'etr' which is set to the formatted value of the current event's estimated time of restoration.

Change Detection

When MDS orders are updated due to changes in the event that is associated with the order, it is important to send only the elements that have changed. This is because of the limited bandwidth available to transmit data to and from field crews.

In addition, some elements that change may not be important enough to cause an update to occur, for example, the number of customer calls that are associated with the event.

Some elements that do not change may have to be sent every time that an update message is to be sent, for example the order identifier could be the key on the MDS.

Change detection only applies to Output Documents, and only to documents that update data previously sent to the MDS. To indicate that change detection applies, change detection only occurs when the trigger invoking the Output Document has the 'S' (send on change) flag set. The rest of this section assumes that change detection applies.

The default setting for an element is that it is only included in the output XML when it changes, and that a change to the element is not important enough to cause an update to be in effect. For example:

```
&NumCustCalls = $E.custCall;
```

An element that causes the update to be sent has the 'S' (send on change) flag set. For example:

```
&IntDev:S = $E.devAlias;
```

An element that is always sent when the update is to be sent has the 'I' (always include) flag set. For example:

```
&Create:I < confirm="Always"; >;
```

The 'S' and 'I' flags can be combined. This means that the element is always sent on an update, and that a change to it causes an update to be sent. For example:

```
&JobNumber:SI=$O.externalId;
```

Change detection applies to element attributes in the same way as elements.

If the element or any attributes is to be included in the output XML, the element and all of its attributes (including those that have not changed) are included in the output XML.

When an object with an associated document is created, a copy is made of the document, with all elements and attributes marked as changed, because they have not been sent to the MDS yet. If an element is not included in the initial transmission of the document (due to an if statement), it, and all its attributes, remains marked as changed. Normally, this is the correct behavior. However, if it has constant attributes, and may is set externally by a

call to setDocValue to suppress sending the value, the element will no longer be marked as changed, but the attributes will remain marked as changed. This means that the first time that the element is processed (due to the condition in the if statement changing), it will be transmitted because the attributes are marked as changed, which is likely not the intention.

Using the 'ignore attribute changes' flag 'A', defeats the behavior. It can be combined with the 'S' and 'I' flags, if appropriate. For example:

```
if (($E.est_source == "O") || ($E.est_source == "C"))
{
   WorkCodeUDF:SA::ert = formatDateTime($E.estRestTime);
}
```

If the element or any attributes is to be included in the output XML, the element and all of its attributes (including those that have not changed) are included in the output XML.

The values of the elements and attributes are held in memory while the adapter is executing. In order to preserve these values over a shutdown/restart cycle, they are stored in the database. By default, the adapter saves all elements and attributes that do not have constant values. However, some element and attribute values are always set during the execution of the Output Document, for example:

```
if (@docType == "create0x22)
{
   @conf = Always;
}
else
{
   @conf = Never;
}
&Confirm:I = @conf;
```

In this example, there is no need to save the value of the 'Confirm' element. To prevent saving its value, add the 'don't save' flag 'D' to the element's definition, for example:

```
&Confirm:ID = @conf;
```

The table used to save the values of the order document is described in section The Order Tables on page 5-40.

The External Objects

The external objects are:

- The Event object, identified by 'E', holds the data from the event's latest 'SRSoutput' data. The names of the fields are the relevant fields in the Oracle Utilities Network Management System SRSoutput class. They are listed in DML Function Calls on page 5-69.
- The Incident object, identified by 'I', holds the data from the event's customer calls. The Incident object is not automatically populated. It can be populated by a call to the function `readIncidents()`. If memory is at a premium, the Incident object can be unpopulated by the function `clearIncidents()`. The names of the fields are the relevant fields in the Oracle Utilities Network Management System Incident class. They are listed in DML Function Calls on page 5-69. There can be any number of incidents associated to an event, including zero. Therefore, the offset of the incident of interest has to be supplied when accessing an incident field. Offsets start at zero. The offset is an integer, and is the second component of the external data reference. For example, `$I.1.getCustomerName` reads the name of the second customer in the incident array. A function, `sortIncidents()`, is supplied to sort the incidents. Before sorting they are in the order that the customers called. Any reference to an incident field can

fail, because there may be no incidents. Such a failure causes the value of the element, attribute or variable being assigned to be set to its default.

- The Order object, identified by 'O', holds data relating to orders sent to the MDS. It holds the order's current event object (possibly aggregated to summarize a set of related events), the Output Document that holds all the document data for the order for change detection, a number of fields that are always available (section Permanent Order Object Fields on page 5-148, Permanent Order Object Fields on page 5-148 of DML Function Calls on page 5-69), and other data fields as configured by the MDS_ORDER and MDS_ORDER_FIELD tables. See MDS_ORDER on page 5-40 for a description of the order tables.
- The Relationship object, identified by 'R', holds data relating to event relationships processed by the dml. It holds the type of relationship, the handles of all the related events, and a number of fields that are always available (see section Permanent Relationship Object Fields on page 5-149, Permanent Relationship Object Fields on page 5-149 of DML Function Calls on page 5-69).
- The Global Data object, identified by 'G', which holds named values for use by any of the documents. A field is created by assigning values to the field; for example, `$G.QueueManager = OPS;`. If a field that has not been created is read, the field is created with a value of "", the empty string, and an warning is output to the log. The global data object usually holds configuration data, and the fields are set in a Configuration Document.
- The Trigger Parameter object, identified by 'T', which holds the parameters sent to Output Documents when they are triggered from another document using the function '`triggerOutputDoc`'. The first parameter to '`triggerOutputDoc`' specifies the Output Document to trigger, the second parameter specifies the trigger to pull, and the rest of the parameters values are available to the Output Document as fields '1', '2' … up to the number of parameters supplied, less two (the document and trigger names). For example, `@param1 = $T.1;` sets the variable 'param1' to the value of the first parameter.

Input Element Arrays

The declaration of input elements discussed in section Input Elements and Attributes on page 5-18. can only handle elements whose tags are unique within the bounding parent element (which may be the root element). If such an element appears in the input XML, its value (or those of its own sub-elements) will override the values previously read. Input element arrays solve this problem.

Generally there are two situations that repeated elements are required:

- When the elements contain the same type of data and each should be processed in a similar fashion. For example, a crew logs on when the MDS had previously assigned multiple orders to the crew. Each of these assignments should be made to the crew on Oracle Utilities Network Management System.
- When the elements contain different types of data, and the individual elements are identified by the value of a particular attribute, in effect giving the element a compound tag.

Using an element array with an unspecified index solves the first situation. For example:

```
&CrewAssignments
{
&CrewAssignment[]
{
&OrderId;
&AssignmentStatus;
}
}
```

This allows any number of elements with the tag 'CrewAssignment' to be processed. This can be achieved using the 'for' statement described below.

Using an element array with a specified index attribute solves the second situation. For example:

```
&UDFS
{
&UDF[idx];
}

@etr = &UDFS/UDF[et];
@troubleType = &UDFS/UDF[tt];
```

which assigns the 'UDF' element whose 'idx' attribute is 'et' to the variable 'etr' and the 'UDF' element whose 'idx' attribute is 'tt' to the variable 'troubleType'.

Array elements can be given alternate names in the same way as normal input elements, but they cannot be given flags and defaults, as they have no meaning. Individual array indices can be required to be present, using a required index specification. For example:

```
&UDFS
{
&UDF[idx] R(et, tt);
}
@etr = &UDFS/UDF[et];
@troubleType = &UDFS/UDF[tt];
```

Prevents the processing of the input XML when the input XML does not contain a 'UDF' element with an 'idx' attribute of 'et' and contain a 'UDF' element with an 'idx' attribute of 'tt'. The required index specification consists of an 'R' followed by a comma separated list of attribute values in parentheses '(' ')'.

While sub-elements to array elements can be given names, their usage differs from normal sub-elements because the appropriate index must be specified. This is done using a format similar to the long form of referencing tags, using forward slashes '/'. For example:

```
&ancestor
{
   &grandparent[idx]
   {
      &parent
      {
      &child;
      }
   }
}
@son = &ancestor/grandparent[smith]/parent/child;
```

uses the full long form.

```
&ancestor
{
   &grandparent[idx]:::granny
   {
      &parent
      {
      &child;
      }
   }
}
@son = &granny[smith]/parent/child;
```

uses a name for the array element.

```
&ancestor
{
   &grandparent[idx]:::granny
   {
      &parent
      {
      &child:::son;
      }
   }
}
@son = granny[smith]/son;
```

uses a name for both the array element and its sub-element.

For Statement

The for statement, or for loop, is used to iterate through the contents of an array element.

The array element can either have a specified index attribute or an unspecified index. The usage is similar.

For example:

```
&CrewId:R;

&CrewAssignments
{
&CrewAssignment[]:::asn
{
&OrderId;
&AssignmentStatus;
}
}
if (!findCrewById(&CrewId))
{
   stop;
}

for (&asn[], @i)
{
   if (isSet(&asn[@i]/OrderId) &&
    isSet(&asn[@i]/AssignmentStatus) &&
    findOrder(externalId, (&asn[@i]/OrderId))
   {
      if (&asn[@i]/AssignmentStatus == ASN)
{
assignCrew();
      }
elseif (&asn[@i]/AssignmentStatus == DSP)
{
```

```
dispatchCrew();

}
   }
}
```

The for statement executes all the statements between the matching brackets '{' and '}', for each of the elements in the tag array ('&asn[]' in this case), in the order that they appeared in the input XML. During execution of the statements the 'for' variable ('@i' in this case) is set to the elements index in the tag array. As this array did not have an index attribute specified, the variable has a numeric value, starting at zero, and is incremented by one between loop executions. If the XML does not contain the element, the loop is never executed.

If, instead, the array element had an index attribute, for example:

```
&CrewAssignments
{
&CrewAssignment[idx]:::asn
{
&OrderId;
&AssignmentStatus;
}
}
```

the loop variable would contain the values for the 'idx' attribute included in the input XML. Note, however, that if the XML contained any 'CrewAssignment' elements, without an 'idx' attribute, these elements would be ignored, and therefore not available for processing.

Queue Specification

The queue specification is used to specify the queue that XML from Output Documents are sent to, and the queue that input XML is received on to be processed by Input Documents. The queue specification appears in the header portion of the document. For example:

```
queue = NMS.TO.MDS.REQUEST;
```

Which sets the queue name to a constant. Commonly, the queue is set to the value of a field in the global object to facilitate the configuration of the queue names.

Output Documents can change the queue name by accessing the queue variable in the body of the document. For example:

```
If (@use_alternate_queue)
{
   @queue = $G.alternateQueue;
}
```

Association of an Output Document to the Order Object

The order document must have an associated Output Document that generates the Order creation (usually) and update (always) XML. It is used to cache all the element data that is used for change detection. This association is achieved using the associate specification in the document header which takes the form:

```
associate = O;
```

where the 'associate' is the associate keyword and the 'O' identifies the Order Object.

Triggers

Triggers specify when Output Documents are activated to generate XML to be sent to the MDS. For example:

```
trigCreateOrder < SRSoutput; > =
($E.status == "ACK") && !findOrder(event, $E.outageHdl);
```

might be used to trigger the creation of an order.

The 'trigCreateOrder' is the trigger's name. The value of a trigger is available to the body of the document in a variable with this name.

The angle brackets, '<' and '>', contain the trigger specification(s), which define the circumstances under which the trigger is to be tested. In this case the arrival of an asynchronous 'SRSoutput' message.

After the assignment is the expression which determines when the trigger is to be fired. The expression is evaluated and if it is true, i.e. not the empty string, the trigger is fired. The result of this evaluation is then assigned to the trigger variable. In the example, the trigger will fire if the event is in the acknowledged state and no order has been created for the event.

If an expression is not supplied, the trigger always fires when the trigger specification is satisfied. In this case, its value is set to 'Y'.

Triggers can also have the 'send on change' 'S' flag set. If not set, all elements in the document are sent in the resulting XML. If set, only those elements that have changed are set. For example:

```
trigUpdateOrder:S < SRSoutput; > =
(!isIn($E.status, "UNA", "CNL") && findOrder(event, $E.outageHdl);
```

There can be multiple triggers, only one of which is fired. The triggers are evaluated in order of their definitions and the first to fire takes effect. **The unfired triggers all have a value of false.**

There are a number of types of trigger specifications. In some cases they need values. They are:

- The reception of a SRSoutput message. The trigger specification is 'SRSoutput', which has no value. Examples of the SRSoutput trigger are shown above.
- When an event is deleted. This occurs when outages are merged, and when a previously processed event is not returned by JMService at start up. The trigger specification is '**EventNonexistent**', which has no value. Commonly, this triggers the same Output Document that handles event cancellation. The event is supplied in trigger parameter 1. An example of an event non-existent trigger is:

  ```
  triggerEventNonexistent<EventNonexistent;>
                  =  findOrder(order, $T.1) && $O.externalId;
  ```

- Periodically. The trigger specification is 'Periodic', which needs a value that is the period at which to fire the trigger, in seconds. An example of a periodic trigger that fires once a minute is:

  ```
  trig1min< Periodic=60; >;
  ```

- By request in another document, using the 'triggerOutputDoc' function. The trigger specification is 'OnRequest', which needs a value that is the number of trigger

parameters that need to be passed by the requesting document. An example of a request trigger with two parameters is:

```
trigOnRequest<OnRequest=2;>
                =  findOrder(event, $T.1) &&
                   isIn($E.status, "UNA", "CNL") &&
                   $O.externalId;
```

- Creation of, changes to the number of events in, and deletion of an event relationship processed by dml. The trigger specification is 'RelationChanged', which as no value. The Output Document is activated once for each event in the relationship. The event is supplied in trigger parameter 1. An example of an relationship change trigger is:

```
trigRelationChanged< RelationChanged; >
= findOrder(event, $T.1) &&
          isIn($E.status, "UNA", "CNL");
```

- Deletion of an event relation processed by dml. The trigger specification is 'RelationDeleted', which as no value. The Output Document is activated once for the relationship. The relation is supplied in trigger parameter 1. An example of an relationship deletion trigger is:

```
trigRelationDeleted< RelationDeleted; >
= findOrder(RELATED_OUTAGE, relation, $T.1) &&
        $R.externalId;
```

- A change to the number of events in an event relation that is aggregated by the adapter. The trigger specification is '**AggregateChanged**', which has no value. The Output Document is activated once for the order in which the events are aggregated. The order is supplied in trigger parameter 1. An example of an aggregate change trigger is:

```
trigAggregateChanged< AggregateChanged; >
= findOrder(order, $T.1) &&
      $O.externalId;
```

  This trigger is often used to ensure that all events in the relation have data updates sent by the MDS before new events are added to the relationship, for example the estimated time to restore.

- An SRSoutput message arrives indicating **number of events are merged**. The trigger specification is '**EventMerged**'. Its value specifies the name of an Output Document, known as the Merge Priority Document, which is used to generate the priority of all of the orders associated with the events involved in the merge, if any. The Merge Priority Document must have a request trigger named 'call'. The Output Document that contains the event merged trigger is known as the Merge Document. There can be zero or one Merge Document in all the dml files processed by the adapter. If no Merge Document is supplied, the SRSoutput message is processed via SRSoutput triggers, and the merged events are processed via event non-existent triggers. If a Merge Document is supplied, the adapter processes the SRSoutput message as follows:

  1. For each of the events involved in the merge, including the surviving event, the adapter determines whether the event is associated with an order. If so it's order becomes eligible to be the surviving order, except for a non-surviving event's order is in an aggregate relationship. If there are no eligible orders, the SRSoutput message is processed via SRSoutput triggers, and the merged events are processed via event non-existent triggers. Neither the Merge Document nor the Merge Priority Document is processed.

  2. When there are multiple eligible orders, the adapter must choose which one will become the survivor. The Merge Priority Document provides a priority value to allow this choice to be made. The adapter processes the Merge Priority Document via the

'call' trigger. The Merge Priority Document has its order and event objects set. Note that if the event is the surviving event, the previous version of the event object is set. This allows the event object's fields before the merge to be used to determine the priority.

3. The Merge Priority Document returns the priority in the trigger argument object. The priority consists of a priority sort definition and one or more priority values. The priority sort definition is returned in the '0' (the character zero) field of the trigger argument object ($T.0). If this value is the empty string, the order is no longer eligible to survive. If not empty, it defines the number and sort order of the priority values. The priority values are returned the '1', '2', … fields ($T.1, $T.2, …), up to the number of values. The number of characters in the priority sort definition determines the number of values expected by the adapter. Each character determines the sort order for the corresponding value, 'A' or 'a' for ascending and 'B' or 'b' for descending, the first character applies to $T.1, the second to $T.2, etc.

4. If there are multiple orders eligible, the one with the highest priority becomes the survivor. Each priority value is sorted alphabetically in the order specified by its character in the priority sort definition. The first value ($T.1) is examined first. If one order ranks higher that all the other, it is chosen. Otherwise, any order with a lower priority is discarded. Then the other values are examined in turn, until an order is chosen. If all the priorities are the same, the order associated with the surviving event, if any, survives. If the surviving event has no order, the order associated with the oldest event survives. For example, the following dml fragment illustrates how to choose the order with the most advanced crew assignment/dispatch status, and if they are equal the order with the oldest event.

```
# two priority values, the first descending, the second ascending
$T.0 = DA;

# orderCrewStatus() returns 'A' for Assigned, 'D' for dispatched,
     'O' for on site, nothing for none
@ocr = orderCrewStatus();
if (@ocr)
{
$T.1 = @ocr;
}
else
{
# 'a' precedes all of the valid values
$T.1 = a;
}

# formatDateTime() returns the date and time in the format
# YYYY-MM-DDTHH:MM:SS
$T.2 = formatDateTime($E.outageTime);
```

5. The Merge Priority Document can populate other fields in the trigger argument object, to be used by the Merge Document when the order being processed becomes the surviving order. Note that the Merge Priority Document is processed even if there is only one eligible order so that these fields, if any, can be passed to the Merge Document.

6. If the surviving order is not associated with the surviving event, the surviving order is re-associated to the surviving event. The order that was associated with the surviving event is re-associated to the surviving order's old event, so that it can be processed via an event non-existent trigger, to allow normal order clean up.

7. The adapter processes the Merge Document with the surviving order object and surviving event object set to the new version of the event, and the trigger argument object fields set by the Merge Priority Document when processing the surviving order.

8. Finally, the SRSoutput message is processed via SRSoutput triggers, and the merged events are processed via event non-existent triggers.

An example of an event merged trigger is:

```
TrigEventMerged <EventMerged="OrderMergePriority";>;
```

For this to be valid, there must be an Output Document named 'OrderMergePriority', with a request trigger named 'call'.

The Root Element

The root element is the element that contains all of the other elements in an XML document. The root element in dml serves a different purpose depending on whether it is part of an Output or Input Document.

In an Output Document, it is used to generate the root element in the XML to be sent. In an Input Document it is used to select the Input Document or Documents that the input XML can be processed by, similar to a trigger for an Output Document. An example of a root element follows:

```
&RootElement <environment = $G.environment; revision = "1.0.0";> =
CreateJob;
```

The root element has the same format for both Input and Output Documents.

The root element differs from other elements in that the element's tag is defined by the value of the element, 'CreateJob' in this example. The pseudo-tag 'RootElement' keyword identifies it to be the root element.

In an Output Document, the example would generate the following start element tag:

```
<CreateJob environment="Test" revision="1.0.0">
```

assuming that the global field 'environment' held the value 'Test'.

To select an Input Document, the input XML's root element must have the same tag, and all the attributes in the root element specification must be present and have exactly the same contents. Extra attributes in the XML's root element are ignored.

An Input Document with the same root element definition example above would be selected by the root element in the example above.

The root element is defined in different areas, depending on the type of document.

In an Output Document the root element is in the body of the document, because it's tag may have to be determined during document processing. It is the only element in an Output Document that is an exception to the rule that states that elements are generated in the order that they appear in the Output Document.

In an Input Document the root element is the header of the document because it is used before any processing is done in the document.

The Base Path

The base path only applies to Input Documents, and is not necessary, but can make Input Documents more compact. Consider the following XML:

```
<ConfirmJob>
 <ApplicationArea>
 </ApplicationArea>
 <DataArea>
  <Job>
   <OriginalApplicationArea>
    <BODId>OrigBODId</BODId>
   </OriginalApplicationArea>
   <CreateSuccess>
    <JobNumber>1234567890</JobNumber>
   </CreateSuccess>
  </Job>
 </DataArea>
</ConfirmJob>
```

The XML could contain many other elements, but the 'BODId' and 'JobNumber' are the only elements to be processed. The elements in the Input Document would be:

```
&DataArea
{
    &Job
    {
        &OriginalApplicationArea
        {
        &BODId;
        }
        &CreateSuccess
        {
        &JobNumber;
        }
    }
}
```

Note that 'BODId' and 'JobNumber' have a common grandparent 'Job'. By setting the base element to the grandparent by adding:

```
BasePath = DataArea/Job;
```

to the document's header, the elements would become:

```
&OriginalApplicationArea
{
    &BODId;
}
&CreateSuccess
{
    &JobNumber;
}
```

Stop Statement

The Stop statement causes the processing of the current document to stop. It takes the form:

```
stop;
```

It is usually contained in an 'if' statement. Any statements with side effects, for example a SQL Insert, processed before the 'stop' do take effect.

A stop statement prevents an Output Document's XML from being sent.

A stop statement in a Configuration Document, described below, causes initialization to fail.

Include Statement

Sometimes it's useful to have the same set of statements in two different places in a dml file. For example all Output Documents may need the same header, or application area. This can be achieved by placing the repeated statements in another file and then including the file more than once in another file. The following is an 'include' statement:

```
include ohdr.dml
```

This 'include' statement in effect replaces the text 'include ohdr.dml' with the contents of the file 'ohdr.dml'. Files being included can also include other files, but the nesting level is limited to 10 deep so that infinite recursion can be prevented.

Configuration Documents

Configuration Documents are used to set configuration data and load configuration tables from the database at initialization time. They are similar to Input Documents, but have no elements.

They are processed at initialization time, and are then discarded. Any errors encountered when processing a Configuration Document should be made fatal by executing a stop statement, causing initialization to fail.

Common uses are to set fields in the global data object, including configuration fields, and to load mapping tables, used by the 'mapTableStr' and 'mapTableCode' functions described in DML Function Calls on page 5-69. For example:

```
ConfigDoc Configure
{
# fields for other documents
$G.OutRequestQueue=NMS.MDS.REQUEST;
$G.OutErrorQueue=NMS.ERROR;
$G.InReplyQueue=MDS.NMS.REPLY;
$G.InRequestQueue=MDS.NMS.REQUEST;
$G.environment=Test;

# configuration parameters
$G.config_QueueManager_name=OPS;
$G.config_OutQueue_req_name=$G.OutRequestQueue;
$G.config_OutQueue_err_name=$G.OutErrorQueue;
$G.config_OutQueue_numThread=5;
$G.config_InQueue_rep_name=$G_InReplyQueue;
$G.config_InQueue_rep_numThread=2;
$G.config_InQueue_req_name=$G.InRequestQueue;
$G.config_InQueue_req_numThread=4;
$G.config_ErrorQueue_name=$G.OutErrorQueue;
$G.config_ErrorDoc_name=Error;
$G.config_ErrorDoc_trigger=xmlErrorTrigger;
```

```
$G.config_Relation_Aggregate_AcknowledgeEvents = ack;
$G.config_Relation_Aggregate_type = PARTIAL_RESTORATION;
$G.config_Relation_Aggregate_ActiveEvents = Y;
$G.config_Relation_dml_type = RELATED_OUTAGE;


# Load map tables
if (!loadMapConfigTable(mds_map_config) ||
    !loadMapTable(mds_cls_desc) ||
    !loadMapTable(mds_cls_type))
{
   stop;
}
}
```

Configuration Fields

Configuration fields have names starting with 'config_'. The available configuration fields are:

- **config_QueueManager_name**: The name of the queue manager to use. This field must be specified, or the adapter will exit with a configuration error message.
- **config_OutQueue_<id>_name**: The name of an output queue to use. Each output queue needs to have a unique id, which replaces the '<id>'. The unique id may not contain an underscore (_).
- **config_OutQueue_numThread**: The number of threads to use to generate output documents. If not specified, one thread is used to generate output documents.
- **config_InQueue_<id>_name**: The name of an input queue to use. Each input queue needs to have a unique id, which replaces the '<id>'. The unique id may not contain an underscore (_).
- **config_InQueue_<id>_numThread**: The number of threads to use to process input documents arriving on the input queue with the same id. Each input queue needs to have a unique id, which replaces the '<id>'. If not specified, one thread is used to process documents on the queue.
- **config_ErrorQueue_name**: The name of the queue to send XML parse error and warning reports to. This field must be specified, or the adapter will exit with a configuration error message.
- **config_ErrorDoc_name**: Specify an output document to process error reports. If specified, the config_ErrorDoc_trigger field must be specified. If not specified, the standard XML error document, as specified in the MQ/XML adapter documentation, is used.
- **config_ErrorDoc_trigger**: The trigger to pull in the error document when there is an error or warning to report. Ignored is no error document is specified. If the specified trigger does not exist in the error document, the adapter exits with a configuration error message. The adapter supplies three trigger arguments to the error document. Argument one is the error or warning message description, argument two is the priority level, one of 'Warning', 'Error', and 'Fatal Error', and argument three is the offending XML document.
- **config_Relation_Aggregate_type**: A comma separated list of relationship types to aggregate. The relationship types are: NESTED_OUTAGE, MOMENTARY_OUTAGE, PARTIAL_RESTORATION, and RELATED_OUTAGE. If a pseudo relationship of a type that is aggregated by the adapter is created using createPseudoRelation(), the pseudo relation is aggregated. If a relationship type is configured for both aggregation and dml processing, the adapter exits with a configuration error.

- **config_Relation_Aggregate_AcknowledgeEvents**: Acknowledge all unacknowledged events in aggregate relations. The value of this field is used in a call to JMS::requestRowAction() as the button name. This field should be set if pseudo aggregate relations are created on events that may not be acknowledged.
- **config_Relation_Aggregate_ActiveEvents**: If the field is not the empty string "", sum count data for all active events in an aggregated relation. The count data event fields are: customersOut, crit_k, crit_c, and crit_d.
- **config_Relation_dml_type:** A comma separated list of relationship types to be processed by the dml, using the relationship object. The relationship types are: NESTED_OUTAGE, MOMENTARY_OUTAGE, PARTIAL_RESTORATION, and RELATED_OUTAGE. If a pseudo relationship of a type that is processed by the dml is created using createPseudoRelation(), the pseudo relation is processed by the dml. If a relationship type is configured for both aggregation and dml processing, the adapter exits with a configuration error.
- **config_Relation_dml_AcknowledgeEvents**: Acknowledge all unacknowledged events in dml processed relations. The value of this field is used in a call to JMS::requestRowAction() as the button name.
- **config_MaxBackoutCount**: The adapter uses the MQSeries syncpoint facilities to preserve input messages when there is a failure. Using the MQSeries syncpoint facilities introduces the possibility that a 'poison' message will be sent by the MDS. A 'poison' message is one that can never be successfully processed, for example because an Oracle Utilities Network Management System table has a constraint that the contents of the message violate. If the 'poison' message is never discarded, MDS will continually try to process the message, fail, and then restart. This parameter sets a limit on the number of restarts that MDS will perform before discarding a message. The default value is five. A value of zero disables this feature. If a message is discarded, the error is logged to the log file, including the offending XML, and if the error document is configured, and an error report is sent to the error queue.
- **config_Event_QueueDelay**: When event data is received in an SRSoutput message, from JMService, they are held for this period before they are queued for processing. If another message for the same event is received before the delay has expired, the older message is discarded, and the new message is held for the delay period. This avoids unnecessary processing and message transmission when event data is changing rapidly. Setting this delay too short can cause extra messages, while setting it too long can cause poor response. The value is in seconds. The default value is four seconds. A value of zero disables this feature.
- **config_Event_ReprocessPeriod**: In certain circumstances, for example when more that one event is grouped, the adapter needs to request an event's status from JMService. The adapter periodically requests these events' statuses in a single request, reducing the burden on JMService. In addition, if an SRSoutput message for one of these events arrives before it is time to do the request, the request does not have to be made. Setting this period too short can cause extra messages, while setting it too long can cause poor response. The value is in seconds. The default value is six seconds. The minimum value is two seconds. It must be at least 2 seconds longer than config_Event_QueueDelay.
- **config_Crew_AssignmentCheckPeriod**: When the assignment of crews to events is the responsibility of the adapter, as a proxy for the MDS, Oracle Utilities Network Management System can be configured to reduce the possibility of an operator inadvertently assigning a crew to an event. However, it must be possible to assign crews if Oracle Utilities Network Management System cannot communicate with the MDS, hence mistakes can happen. The adapter periodically checks all crew assignments. A sub-set of crew assignments is checked at the end of each period, the events in ten orders, and ten crews for events not in an order being checked each time.

Setting the period too short causes unneeded processing, setting it too long delays such mistakes being repaired. The value is in seconds. The default value is six seconds. A value of zero disables this feature.

- **config_Crew_MoveAssignmentCheckDelay**: When crew assignments are being checked, allowing the checking to occur during event grouping can, in some configurations, cause unnecessary message traffic between the adapter and JMService. To prevent this, when a grouping happens, crew assignment checking is delayed. The value is in seconds. The default value is two seconds. A value of zero disables this feature.
- **config_Relation_CheckPeriod:** When event relationships are processed by the adapter, the adapter loads the relationship database table each time a relationship is created, changed or deleted. In addition, the adapter checks for changes to the table at this period. The value is in seconds. The default value is 30 seconds. A value of zero disables this feature.
- **config_IgnoreCondStatus**: In most implementations of the adapter, additional alarms in the Oracle Utilities Network Management System Work Agenda should not be processed. The value of this configuration parameter is a list of condition statuses, separated by commas (,), that are to be ignored by the adapter. To ignore additional alarms (often NFY events) set this value to 12.
- **config_CompleteStatus**: In certain situations the adapter need to be able to determine if an event is complete, for example to prevent the assignment of a crew to a completed event, which is illegal. This can only be determined by examining the status string for the event, which is configurable in Oracle Utilities Network Management System. The value of this configuration parameter is a list of statuses, separated by commas (,), that indicate that an event is complete. The default value of this parameter is CMP, CNL.
- **config_EventUpdateTimeout**: When device outages are confirmed and restored (using confirmDeviceOutage() and restoreOutage()), the new state of the event(s) needs to be read from JMService. Because device operations are initiated by a message to DDService, which sends a notification to MTService to update the model, which subsequently notifies JMService of the model change, the new state cannot be read immediately, because JMService may not have received the notification. To avoid this, the adapter waits for an SRSoutput message updating the event before reading the new state. To prevent the adapter from hanging if an event update does not occur, a timeout is used to interrupt the wait. This value is the timeout in seconds. The default value is 20 seconds. The minimum is two seconds.
- **config_MaxThreadBusyUntilFatalError**: The adapter monitors the input and output threads to detect Mutex deadlocks, which would cause the adapter to hang. This value is the maximum number of seconds that a thread can be responding to a single trigger or input XML document. The default value is 300 seconds (5 minutes). The minimum is 60 seconds.
- **config_StopServiceOnHighLevelStop**: The adapter runs as a Windows Service, and it usually set to restart after a period after it fails. (This period is often the minimum one minute). If the adapter tells Windows that it has stopped normally, using a Service Stop message, just before exiting Windows does not try to restart the adapter. If the adapter does not send a Service Stop message, Windows will restart the adapter. When the adapter exits due to Stop request from the Service Property dialog, it sends Windows a Service Stop message, because the user is intending that the adapter stops and does not restart. When the adapter exits abnormally, it does not send a Service Stop message so that Windows will restart the adapter. However, when the adapter is sent a high-level stop message from Oracle Utilities Network Management System using the Action command, the user may or may not want the adapter to restart. This value determines whether the adapter sends a Service Stop message under these

circumstances. A value of 'Y' causes the adapter to send a Service Stop message, while a value of 'N' prevents the adapter from sending a Service Stop message. The default value is 'N'.

- **config_AllowCloseOutEventCancel**: When this parameter is set to 'Y,' the DML function closeOutEvent will cancel the event instead of completing it, if the appliedRule value OUTAGE_PND_COMPLETE (26) is passed to the function. When this parameter is set to 'N,' the DML function closeOutEvent will not cancel events. The default value is 'Y'.
- **config_IgnoreStormmanUpdates**: When this parameter is to set to 'Y' (default), the adapter will not process TRBL_ERT_UPDATE messages generated when Storm Management recalculates ERTs. When this parameter is to set to 'N' the adapter will process such messages.
- **config_AllowManualEntryForSCADA**: When this parameter is to set to 'Y,' the adapter will perform manual entry in order to operate SCADA device in the NMS model. When this parameter is to set to 'N' (default), the adapter will not be able to operate SCADA devices.
- **config_Username:** Username under which the adapter will perform crew-related API calls into NMS. Default value is 'MDS'.
- **config_UseGlobalUsernameForCrewOps:** If set to 'Y,' then the value specified by the '$G.config_Username' will be used as the username under which the adapter will perform crew-related API calls to NMS. This is the default setting.

  If set to 'N,' then the adapter will use the username provided in the DML function call. If a particular crew-related DML function does not accept username parameter or if the supplied parameter is empty the '$G.config_Username' value will be used.
- **config_BlockingMqGetEnable:** (boolean) If true, the blocking get() behavior will be enabled. Default is false.
- **config_BlockingMqGetWaitInterval:** (integer) The number of milliseconds that the adapter will wait for a message to appear on the queue before the MQGET call completes with the MQRC_NO_MSG_AVAILABLE reason code. This option only takes effect if config_BlockingMqGetEnable is "true0x22. Default is 2000 ms.

Pseudo Relationships

Pseudo relationships can be created by the dml so that all the events on a single device can be processed in the same way as an Oracle Utilities Network Management System created event relationship. The processing of these relationships is configured in a configuration document.

For example, a probable device outage is created from multiple customer calls grouping to the common transformer, but the crew discovers that there are multiple service problems only affecting some of the customers (perhaps a tree limb took down two service wires). The crew will fix all of the problems, so they do not need multiple MDS orders. When the individual service status is set for the affected customers, all the events generated will be treated in the same way as a partial restoration. (This example assumes that partial restorations are aggregated, and the dml creates a pseudo partial relationship when this situation arises.)

When all of the events in a pseudo relation are completed, the relation itself is automatically completed.

Configuration Tables

The following tables are used in conjunction with the dml files to configure the MDS adapter. They are loaded at startup, or, in some cases, when a dml statement needs them.

The Order Tables

The order tables save order data and configure the fields that are available to the dml in the external Order object, identified by 'O' in the dml.

MDS_ORDER

The MDS_ORDER table is used to save order data so that the adapter can continue to process orders over a adapter shutdown restart cycle. While not strictly a configuration table, it is described here to clarify the use of other configuration tables. The table has a fixed set of columns that are always in the table, and columns to hold Order object field values, element values and attribute values. The fixed set of columns is:

Column	Type	Description
h_cls	NUMBER	Order class
h_idx	NUMBER	Order Index
event_cls	NUMBER	Key event class
event_idx	NUMBER	Key event index
active_event_cls	NUMBER	Event class for last active event
active_event_idx	NUMBER	Event index for last active event
active	CHAR(1)	Active flag (Y = active, N = inactive)
when_xml_saved	DATE	When the xml data last sent to the MDS was saved in the database.
when_created	DATE	When the order was created
when_completed	DATE	When the order was completed or cancelled
comp_reason	VARCHAR2(64)	Text explaining why the order was completed or cancelled

The 'h_cls' and 'h_idx' columns make up the order handle, which identifies the order internally and are the key columns of the table. The order handle is available to the dml with a field name of 'order'. The 'event_cls' and 'event_idx' columns make up the handle of the key event for the order. If the event is not aggregated, this is the single event associated with the order. If the event is aggregated, this is the key event of the relationship that makes up the aggregate. The event handle is available to the dml with a field name of 'event'. The 'active' flag indicates whether the order is active, i.e. it has been created, but has neither been completed or cancelled. 'when_created' holds the time and date the order was created. 'when_completed' holds the time and date the order was completed or cancelled. comp_reason hold the text explaining why the order was completed or cancelled. This text is supplied by the dml when it completes the order by calling the 'orderComplete' function.

The columns that hold the field, element and attribute values can have any name, but they must match the contents of the MDS_ORDER_FIELD table and MDS_ORDER_VALUE table. Both are described below. It is suggested that the columns be named similarly to the name of the entity, allowing for the requirements of column names (case insensitivity, etc.). The column types should be VARCHAR2. The columns should be wide enough to hold the data that will be stored in them. The off-line program that allows dml files to be checked before use can generate suggested contents for the MDS_ORDER, MDS_ORDER_FIELD, and MDS_ORDER_VALUE tables.

MDS_ORDER_FIELD

The MDS_ORDER_FIELD table maps the names of the fields in the Order object to the columns used to save their values in the MDS_ORDER table. In addition, it defines the names of all the fields that are available in the Order object. If the dml references a field that is not in this table, the adapter will log an error and initialization fails. The columns in the table are:

Column	Type	Description
name	VARCHAR2(32)	The field's name.
col	VARCHAR2(32)	The column in the MDS_ORDER table that holds the field's value.

MDS_ORDER_VALUE

The MDS_ORDER_VALUE table maps the names of the elements and attributes in the order XML to the columns used to save their values in the MDS_ORDER table. All elements and attributes except those with constant values, and those with the 'don't save' flag set, must be included in this map. The use of the 'don't save' flag is described in section Change Detection on page 5-24. The columns in the table are:

Column	Type	Description
name	VARCHAR2(32)	The element's or attribute's name.
col	VARCHAR2(32)	The column in the MDS_ORDER table that holds the element's or attribute's value.

The recommended way of naming the elements and attributes is to use the alternate name described in Alternate Names on page 5-23. If an alternate name is not specified, the adapter generates element names by numbering all the elements in the order that they appear in the Output Document and appending this number to the letter 'e', for example e1, e2. Note that all elements to be saved from the document are counted, including those with an alternate name, so that if a name is given to an unnamed element, all the other unnamed elements have the same name. If an attribute has no alternate name, the adapter generates the name by appending the underscore character '_' and the attribute's name to the attribute's element name, for example 'el_attr' is the name of the 'attr' attribute of an element with the alternate name 'el'.

An Example

To illustrate the configuration of the order tables and example tables are shown below, based on the contents of the Output Document in DML Examples on page 5-48.

The MDS_ORDER table schema:

Column	Type
h_cls	NUMBER
h_idx	NUMBER
event_cls	NUMBER
event_idx	NUMBER

Column	Type
active	CHAR(1)
when_xml_saved	DATE
when_created	DATE
when_completed	DATE
comp_reason	VARCHAR2(64)
BODID	VARCHAR2(128)
E1	VARCHAR2(64)
E2	VARCHAR2(64)
E3	VARCHAR2(64)
E4	VARCHAR2(64)
E5	VARCHAR2(64)
E6	VARCHAR2(64)
E7	VARCHAR2(64)
E8	VARCHAR2(64)
E9	VARCHAR2(100)
E10	VARCHAR2(64)
E11	VARCHAR2(64)
E12	VARCHAR2(64)
E13	VARCHAR2(64)
E14	VARCHAR2(64)
E15	VARCHAR2(64)
E16	VARCHAR2(100)
E17	VARCHAR2(64)
E18	VARCHAR2(32)
E19	VARCHAR2(32)

The contents of the MDS_ORDER_FIELD table:

col	name
BODID	BODId

The contents of the MDS_ORDER_VALUE table (the element tag is not in the table, it is included here to illustrate the numbering of the elements):

col	name	Element tag
E1	e1	Component
E2	e2	Confirmation
E3	e3	AuthorizationId
E4	e4	CreationDateTime
E5	e5	BODId
E6	e6	ExternalNumber
E7	e7	CreationDateTime
E8	e8	Device
E9	e9	Address
E10	e10	DevPhases
E11	e11	FuseSize
E12	e12	WinterLoad
E13	e13	SummerLoad
E14	e14	NumCustOut
E15	e15	CallerName
E16	e16	CallerAddr
E17	e17	CallerPhone
E18	e18	CallerClues
E19	e19	CallerDevice

The Relationship Tables

The relationship tables save event relationship data and configure the fields that are available to the dml in the external Relationship object, identified by 'R' in the dml.

MDS_RELATION

The MDS_RELATION table is used to save relationship data so that the adapter can continue to process event relationships, and to detect changes in these relationships over a adapter shutdown restart cycle. While not strictly a configuration table, it is described here to clarify the use of other configuration tables. The table has a fixed set of columns that are always in the table, and columns to hold Relationship object field values. The fixed set of columns is:

Column	Type	Description
h_cls	NUMBER	Relation class
h_idx	NUMBER	Relation Index
key_event_cls	NUMBER	Class of key event
key_event_idx	NUMBER	Index of key event
pseudo_dev_cls	NUMBER	Class of pseudo device
pseudo_dev_idx	NUMBER	Index of pseudo device
type	NUMBER	The type of relationship one of: NESTED_OUTAGE(1) MOMENTARY_OUTAGE(2) PARTIAL_RESTORATION(4) RELATED_OUTAGE(8) Pseudo relationships have the same number as their type, with the sign bit (bit 31) set.
active	CHAR(1)	Active flag (Y = active, N = inactive)
when_created	DATE	When the relationship was created
when_completed	DATE	When the relationship was completed or cancelled

The columns that hold the field values can have any name, but they must match the contents of the MDS_RELATION_FIELD table, which is described below. It is suggested that the columns be named similarly to the name of the entity, allowing for the requirements of column names (case insensitivity, etc.). The column types should be VARCHAR2. The columns should be wide enough to hold the data that will be stored in them.

The off-line program that allows dml files to be checked before use can generate suggested contents for the MDS_RELATION and MDS_RELATION_FIELD tables.

MDS_RELATION_EVENT

The MDS_RELATION_EVENT table holds the events that are related to the key events in the MDS_RELATION table. It is not a configuration table. Its columns are:

Column	Type	Description
key_event_cls	NUMBER	Class of key event
key_event_idx	NUMBER	Index of key event
event_cls	NUMBER	Class of related event

event_idx	NUMBER	Index of related event
active	CHAR(1)	Active flag (Y = active, N = inactive)

MDS_ RELATION_FIELD

The MDS_RELATION_FIELD table maps the names of the fields in the Relationship object to the columns used to save their values in the MDS_RELATION table. In addition, it defines the names of all the fields that are available in the Relationship object. If the dml references a field that is not in this table, the adapter will log an error and initialization fails. The columns in the table are:

Column	Type	Description
name	VARCHAR2(32)	The field's name.
col	VARCHAR2(32)	The column in the MDS_RELATION table that holds the field's value.

The Code Mapping Tables

The code mapping tables and views are used to translate values in Oracle Utilities Network Management System to and from the equivalent values in the messages to and from the MDS. Typical usages include converting Oracle Utilities Network Management System control zones into dispatch areas on the MDS, and encoding long values in Oracle Utilities Network Management System to shorted encoded values. The dml uses these tables by calling 'mapTableStr' to convert from the MDS value to the Oracle Utilities Network Management System value, and 'mapTableCode' to convert from the Oracle Utilities Network Management System value to the MDS value. A table can be loaded using the function 'loadMapTable'. All these functions take the name of the table as a parameter.

The tables and views have the following columns:

Column	Type	Description
string	VARCHAR2	The value in Oracle Utilities Network Management System.
code	VARCHAR2	The equivalent value in message.

The width of the columns can be any appropriate value.

There are three types of mapping table:

- Those that map from string to code. In these cases the strings must be unique in the table.
- Those that map from code to string. In these cases the code must be unique in the table.
- Those that map both ways. In these cases the strings and codes must be unique.

This can be configured in a map configuration table, described below. If these is no configuration for the table, and informational message is output to the log, and the table is assumed to map both ways.

It is sometimes convenient to add a code column to other Oracle Utilities Network Management System tables to avoid redundant data. Data from these tables can be accessed by use of a view that maps the appropriate column names to 'string' and 'code'.

If a value to be translated is not present in the table, a default value is used. If the default is not specified, the empty string is used.

The types of the tables and their defaults are specified in a map configuration table, which has the following columns:

Column	Type	Description
tablename	VARCHAR2	The name of the table the default applies to.
type	CHAR(1)	The type of the table. 'C' maps from string to code, 'S' maps from code to string, and 'B' maps both ways.
string	VARCHAR2	The default Oracle Utilities Network Management System value.
code	VARCHAR2	The default message value.

The width of the columns can be any appropriate value. A map configuration table is loaded using a function call similar to 'loadMapConfigTable(mds_map_config)'. The configuration document is a convenient place to do this. There can be multiple map configuration tables loaded.

The SRS Message Type Table

The SRS Message Type Table, MDS_SRS_MSG_TYPE, configures the processing of SRSoutput InterSys messages. It has the following columns:

Column	Type	Description
message_type	NUMBER	The SRSoutput message type that this row configures
action	CHAR(1)	How to process it. 'I', 'D', 'P' or 'R'.
proc_relation	CHAR(1)	Should special relationship processing be applied to it? 'Y' or 'N'.
special	CHAR(1)	Should special processing be applied to it? 'Y' or 'N'.
event_cls1	NUMBER	Event class for TRBL_ERT_UPDATE
event_cls2	NUMBER	Event class for TRBL_ERT_UPDATE

The message_type column values are the SRSoutput message types listed in SRSoutput.h.

The action column must be one of these values:

- 'I': completely ignore this message type. Any message type not included in the table is ignored.
- 'D': do not process the message, but apply the proc_relation and special flags if they are set.
- 'P': process the message as is, after applying the flags.
- 'R': reprocess the message's event after applying the flags. Some SRSoutput messages do not hold all of the event's data (e.g., DAMAGE_RPT_UPDATE), and some are used to update the viewer when conditions are to be hidden and may or may not indicate that an event has changed state (e.g., TRBL_REMOVE_ALL). As a consequence, these messages do not hold all the data required to process them. In these cases, the adapter requests JMService to send all the current data for the message's event.

When set to a value of 'Y', the proc_relation flag instructs the adapter to apply special relation processing to the message. This processing is activated when the appliedRule field of the SRSoutput message contains one of the following values: OUTAGE_PART_REST, OUTAGE_RELATED or OUTAGE_UNRELATED. These indicate that the event is part of a relationship that has been created, deleted or modified. In these cases, the adapter loads the current state of all relationships, reacts to the changes, and reprocesses the message's event after a delay to allow any upcoming changes to the event to arrive before rereading the event's data.

When set to a value of 'Y', the special flag instructs the adapter to apply special, message type specific, processing to the message. The following message types have special processing available:

- TRBL_CLEAR: If the applied rule is not OUTAGE_MERGED, the event is processed by all Output Documents with a 'EventNonexistent trigger.

In addition to the processing of the special flag described above, the following message types are processed differently from normal SRSoutput messages because they are not formatted in the normal manner:

- TRBL_ERT_UPDATE: This message contains a list of estimated time of restoration updates. If this message type is not completely ignored, all the events in the message are reprocessed. As this message contains the events' indexes, but not the events' classes, the potential classes need to be supplied in the event_cls1 and event_cls2 columns. One or both of the classes (normal and momentary event classes) can be configured. If one is zero, it is ignored.
- TRBL_WCB_UPDATE: This message type is not implemented in the adapter. If this message is not configured to be completely ignored, the adapter issues a warning to the log each time this message type is received.

The High Priority Category Table

The High Priority Category Table, MDS_HIGH_PRI_CAT, configures the priorities used by the functions 'highPriTCCategoriesFromClues'. It has the following columns:

Column	Type	Description
group_order	NUMBER	A numeric representation of the trouble code categories
code	VARCHAR2(32)	The trouble codes for each trouble code category
priority	NUMBER	The priority of the trouble codes. Note: The smaller the number the higher the priority. The higher the number the lower the priority

This table assigns the priority of each trouble code within each trouble code category.

Run Time Errors

There are many configuration errors that can be detected at initialization time, causing the adapter to exit. However, some configuration and other errors can only be detected at run-time.

All errors and diagnostic messages are output to the adapter's log file. Important messages are output to the Windows Application Event log. Important errors can be output in XML formatted to an error queue, if an Error Output Document is configured in a Configuration Document. Note that, under some circumstances, it may be impossible to output errors to one or more of these destinations.

The types of run-time errors, and the adapter's reaction to them are:

- Data errors: These errors occur when badly formatted data is received. The input message is discarded.
- Errors detected by the dml: The dml performs appropriate logic. Errors can be logged using the logging functions. Error XML can be sent by triggering the appropriate Output Document.
- dml function call errors: These errors occur when a dml function is called and the prerequisites of the function are not met. The prerequisites of the functions are documented in DML Function Calls on page 5-69. This is regarded as a configuration error, causing the adapter to exit.
- Mapping table errors: These errors occur when a map table function is called and the table name supplied by the dml does not exist in the database. This is regarded as a configuration error, causing the adapter to exit.
- Errors when writing to the database: These are initially assumed to be transient, as some tables have constraints that contain time stamps. The adapter pauses for 1 second and re-tries. The adapter will retry 3 times. If all 3 re-tries fail, the adapter exits, on the assumption that there is a severe system problem. If the error occurred while an input message was being processed, and syncpoint is active (configured using the config_MaxBackoutCount field), the message will be re-processed after the adapter restarts. If this cycle is repeated too many times, the message is discarded.
- API call failure: These are treated in the same way as errors writing to the database.

DML Examples

An Output Document

The following is an example of an Output Document that generates a create request document for a small MDS order. Various lines are numbered to allow reference to them in the explanation below. The numbers are not part of the syntax.

```
1   OutputDoc Job
2   queue=$G.OutRequestQueue; associate=O; persist="Y";
3   triggerCreate< SRSoutput; > = isIn($E.status, "ACK", "ASN", "ENR",
"RST") &&
         ($E.outageHdl.cls != $G.momentary) &&
       !findOrder(event, $E.outageHdl);
4   triggerUpdate:S < SRSoutput; > = findOrder(event, $E.outageHdl) &&
             (!isIn($E.status, "UNA", "CNL"));
5   {
6   @docType = ChangeJob;
7   if (triggerCreate)
8   {
9      @docType = CreateJob;
10     createOrder();
11  }
12  &RootElement<environment = $G.environment; revision = "1.0.0";> =
@docType;
13  &ApplicationArea
14  {
15     &Sender
16     {
17     &Component = NMS;
18     &Confirmation = "Always";
19     &AuthorizationId = "NMS Interface";
20     }
21     &CreationDateTime = formatDTNow();
```

```
22     @BODId = getGuid();
23     &BODId = @BODId;
24  }
25  &DataArea
26  {
27     &ExternalNumber = "NMS:"+ $E.outageHdl.idx;
28     # CreationDateTime is outageTime which is
29     # either when the first customer called
30     # or when the device was opened in the model
31     &CreationDateTime=formatDateTime($E.outageTime);
32     &Device:S = $E.devAlias;
33     &Address:S = substring($E.dispAddress, 0, 100);
34     sqlselect @devPhases, @fuseSize, @winter_load,   @summer_load |
       phase_designation, fuse_size, kva_lod_win, kva_lod_sumr |
       classTable($E.devHdl.cls) | "where h_idx = " | $E.devHdl.idx;
35     &DevPhases = @devPhases;
36     &FuseSize = @fuseSize;
37     &WinterLoad = @winter_load;
38     &SummerLoad = @summer_load;
39     &NumCustOut:S = $E.customersOut;
40     &CallerName = $I.0.getCustomerName;
41     &CallerAddr = $I.0.getAddrStreet + " " + $I.0.getAddrCity;
42     &CallerPhone = $I.0.getCustomerPhone;
43     &CallerClues = $I.0.getShortDesc;
44     &CallerDevice = $I.0.getDeviceAlias;
45  }
46  $O.BODId = @BODId;
47  }
```

Line 1 declares the document to be an output document named 'Job'. The name is used in diagnostics, and when a document is invoked in a 'triggerOutputDoc' function call (see below).

Line 2 contains three specifications, and illustrates that more than one specification can be placed on one line.

- The first specifies the message queue that the document will be sent out on. The specification assigns the queue to be the value of the external data field named 'OutRequestQueue' in the global configuration object. The queue name is available to the rest of the document in the variable '@queue', and could be changed, if required.
- The second associates the document with the order object. Therefore this document will be used to hold the values of all the elements to be used for change detection when the event is updated with an SRSoutput message.
- The third specifies that the message should be marked as persistent when placed on the queue. Not yet delivered messages are lost when the MQ server stops, if they are not marked as persistent.

Line 3 specifies a trigger, named 'triggerCreate' for the document, which causes an order to be created. It does not have the 'send on change' flag, so change detection is not in effect when this trigger is fired. The trigger specification, between '<' and '>' indicates when the trigger should be evaluated to determine whether it should be fired. In this case the arrival of an asynchronous SRSoutput message causes the trigger to be evaluated. The expression following the '=' is a boolean expression that fires the trigger when it evaluates to true. There may be more than one trigger for an output document. The values of the triggers are available to the rest of the document in variables with the same names as the triggers.

Line 3 also illustrates that a specification can span multiple lines.

Line 4 specifies a trigger, named 'triggerUpdate' for the document, which causes an order to be updated after it has been created. It has the 'send on change' flag, so change detection is in effect when this trigger is fired. The trigger specification, between '<' and '>'

indicates when the trigger should be evaluated to determine whether it should be fired. In this case the arrival of an asynchronous SRSoutput message causes the trigger to be evaluated. The expression following the '=' is a boolean expression that fires the trigger when it evaluates to true. There may be more than one trigger for an output document. The values of the triggers are available to the rest of the document in variables with the same names as the triggers.

The '{' on line 5 and the '}' on line 47 enclose the body of the document.

Line 6 sets a default value for the variable @docType, which will be used later to set the root element tag.

Line 7 controls whether lines 9 and 10 are evaluated, depending on which trigger fired. If the triggerCreate trigger fired, 9 and 10 will be evaluated.

Line 9 changes the value of the @docType variable to reflect that the order is new.

Line 10 creates a new order object to save the values of the element's data for change detection.

Line 12 contains the root element tag and attributes. The root element differs from other elements in that the element's tag is specified by the value of the expression to the right hand side of the '=', in this case the value of the variable @docType. The reason for this is so that the same output document can be used for multiple message types, for example to create an order and to update the order. In this example, the 'environment' attribute is set to the value of the external data field named 'environment' in the global configuration object. The root element statement can be anywhere in the output document. All other elements appear in the generated XML in the order that they are within the output document.

Lines 13 to 24 define the 'ApplicationArea' element, with 3 sub-elements, one of which has 3 sub-elements.

The elements on lines 17 to 19 show how constants can be declared. On line 17 the 'NMS' is not surrounded by double quotes ("), because it only contains alphanumeric characters. On line 18 the 'Always' is surrounded by quotes, this acceptable, but not necessary because it only contains alphanumeric characters. On line 19 the 'NMS Interface' must be surrounded by quotes, because it contains a space.

The value of the element on line 21 is supplied by the 'formatDTNow' function that formats the current data and time BOD format CCYY-MM-DDThh:mm:ss.

Line 22 assigns a globally unique id to the variable 'BODId' for use on lines 23 and 46.

Lines 25 to 45 define the 'DataArea' element, with 15 sub-elements.

Line 27 assigns the concatenation of a constant (in quotes) with the event's index.

Lines 28 to 30 are comments and are ignored. Everything between a '#' and the end of a line, inclusive, is a comment and is ignored.

Line 31's element is assigned the time the outage began in the format CCYY-MM-DDThh:mm:ss.

Line 32's element is assigned the alias (name) of the event's interrupting device. Because the 'send on change' flag (S) is present, a change to this element's data will cause the XML to be sent to the MDS.

Line 33's element is assigned the address of the event, truncated to 100 characters. Because the 'send on change' flag (S) is present, a change to this element's data will cause the XML to be sent to the MDS.

Line 34 reads four columns of the interrupting device's facilities (attribute) table. The function 'classTable' supplies the name of the table.

Lines 35 to 38 assigns the values read from the database in line 33 to the appropriate elements.

Line 39's element is set to the number of customers affected by the outage. Because the 'send on change' flag (S) is present, a change to this element's data will cause the XML to be sent to the MDS.

Lines 40 to 44 use the external object 'Incidents' to access customer call data. As there are potentially many incidents associated with an event, the dml has to specify which incident to use. The second component of the name, between the first and second period (.) is the offset into the array of incidents, in this case zero. The last component of the name is the name of the data access method in the Incident class. These examples access the first customer's name, street address, city, phone number, clues, and transformer name. The incidents are normally ordered by the time that they called to report a problem, with the oldest first. If another ordering is required, by total priority for example, the `sort`Incidents() function can be used to change the order.

Line 46 saves the document's globally unique id in the external object for use later in another document.

The XML generated by this output document would look similar to the following:

```
<CreateJob environment="Test" revision="1.0.0">
  <ApplicationArea>
    <Sender>
      <Component>NMS</Component>
      <Confirmation>Always</Confirmation>
      <AuthorizationId>NMS Interface</AuthorizationId>
    </Sender>
    <CreationDateTime>2003-05-01T13:36:13-05:00</CreationDateTime>
    <BODId>guid</BODId>
  </ApplicationArea>
  <DataArea>
   <ExternalNumber>NMS2010</ExternalNumber>
   <CreationDateTime>2003-05-01T13:26:13-05:00</CreationDateTime>
   <Device>XFM12345678</Device>
   <Address>5800 Yonge St. North York</Address>
   <DevPhases>A</DevPhases>
   <FuseSize>100</FuseSize>
   <WinterLoad>40</WinterLoad>
   <SummerLoad>45</SummerLoad>
   <NumCustOut>4</NumCustOut>
   <CallerName>M.J. McLaughlin</CallerName>
   <CallerAddr>5802 Yonge St. North York</CallerAddr>
   <CallerPhone>416 555-1212</CallerPhone>
   <CallerClues>NC</CallerClues>
   <CallerDevice>XFM12345678</CallerDevice>
 </DataArea>
</CreateJob>
```

An Input Document

The following is an example of an Input Document that processes a document containing completion data for an order. Various lines are numbered to allow reference to them in the explanation below. The numbers are not part of the syntax.

```
1 InputDoc CompletionData
2  queue=$G.InRequestQueue;
3  &RootElement<environment=$G.environment; revision="1.0.0";> =
4      FieldReportSave;
5  BasePath=DataArea;
6  {
7      &JobNumber:R;
8      &Crew
```

```
9     {
10    &CrewKey
11    {
12    &CrewName::"MDS";
13    }
14    }
15    &CompletionData
16    {
17    &System:R;
18    &Type:R;
19    &Failure:R;
20    &Cause:R;
21    &InterruptDev:R;
22    &Action:R;
23    &OtherAction::Other;
24    &RestoredTime;
25    &CustomerCaseNotes:::CCN;
26    }
27
28    if (!findOrder(externalId, &JobNumber))
29    {
30    stop;
31    }
32
33    @action=(&CompletionData/Action == "Other")
      ? &CompletionData/OtherAction
      : &CompletionData/Action;
34    @restoredTime = decodeDateTime(&CompletionData/RestoredTime);
35    sqlupdate picklist_info_upd_tr |
      system_om,              type_om,
      failure_om,             cause_om,
      interrupt_dev_om,            action_text,
      crew_restore |
      &CompletionData/System,  &CompletionData/Type,
      &CompletionData/Failure, &CompletionData/Cause,
      &CompletionData/InterruptDev, @action,
      @restoredTime |
      ref_id | $O.event.idx;

36    # call JMS::setCaseNoteInfo if appropriate
37    if (isSet(&CCN))
38    {
39    setCaseNoteInfo(getCaseNotesForEvent($O.event) + " " + &CCN);
40    }
41    # set no dtr flag if appropriate
42    if (isIn(&CompletionData/Type, "Customer Trouble",
43    "Other Utilities",
44    "Scheduled/Customer Notified"))
45    {
46    sqlupdate picklist_info_upd_tr | no_dtr_flag | Y |
      ref_id | $O.event.idx;
47    }

      # log change to event
48    @reason_for_update="Completion Information for Job " +
      &JobNumber + " from MDS";
49    sqlinsert picklist_completion_log |
      ref_id,       who,
reason_for_update, when |
      $O.event.idx, &Crew/CrewKey/CrewName,
@reason_for_update, time();
50
```

```
51  }
```

Line 1 declares the document to be an input document named 'CompletionData'.

Line 2 specifies the message queue that the document will be received on. The statement assigns the queue to be the value of the external data field named 'InRequestQueue' in the global configuration object.

Line 3 contains the root element tag and attributes. The root element differs from other elements in that the element's tag is specified by the value of the expression to the right hand side of the '=', in this case 'FieldReportSave'. The 'environment' attribute is set to the value of the external data field named 'environment' in the global configuration object. In contrast with output documents, the root element statement is in the header of the input document.

A message arriving on the message queue with the name specified on line 2, and with a root element tag and attributes as specified on line 3, triggers the processing of the message by the input document.

Line 5 specifies the base element's tag. The base element specifies the sub-element of the root element at which to start processing the elements specified in the body of the input document. The base element is optional, but is convenient in that it reduces the element nesting level in the body of the input document.

The '{' on line 6 and the '}' on line 51 enclose the body of the document.

Lines 7 to 26 define the tags for the elements that will be processed by the input document.

Line 7 defines a required element 'JobNumber'. The 'R' in the flags field of the element definition indicates that the element must be present in the input XML for the document to be processed. All required elements must be present, otherwise the XML will be ignored.

Line 12 defines an optional element 'CrewName', a sub-element of 'CrewKey', which is in turn a sub-element of 'Crew'. The element has a default value of 'MDS', which is the value used by references to the element in the rest of the document, when the element is not present. If a default value is not present, missing elements have a value of the empty string.

Lines 15 to 26 define the 'CompletionData' element, which has 9 sub-elements, some of which are required.

If all the required elements are present, the data can be processed.

Line 28 calls the 'findOrder' function that finds the order object with an 'externalId' field equal to the JobNumber supplied in the XML. This function returns a boolean indicating whether such an order object was found, or not. This result is inverted by the '!' so that line 30 is executed if 'findOrder' fails. Line 30 is a stop statement, which causes the processing of the document to terminate.

Line 33 sets the variable 'action' to either the contents of the 'OtherAction' element or the 'Action' element, depending on whether 'Action' has a value of 'Other' or not. Both these elements are sub-elements of the 'CompletionData' element. A reference to a sub-element takes the form '&grandparent/parent/subelement'.

Alternatively, an element can be named to make the references more succinct. The element definition of 'CustomerCareNotes' with a name of "CCN" on line 25, and the references to it on lines 37 and 39 are an example of this.

Line 34 converts the time in the element 'RestoredTime' into a format suitable to be passed to the database, and saves it in the variable 'restoredTime'.

Line 35 saves the values of 5 elements and 2 variables in the 'picklist_info_upd_tr' table in the database using a sqlupdate statement. This table has a key column 'ref_id' that is set to the order's event's index number. If aggregate processing has been configured, and the intention is to save the data in the database for all events in the aggregation, the function 'picklistInfoUpdTr' would be more appropriate.

Line 37 tests whether the element named 'CCN' (the 'CustomerCaseNotes' element in 'CompletionData'), was present in the input XML, using the function 'isSet'. If the element was set line 39 is executed . The function call to 'getCaseNotesForEvent' in the parameter list of the call to 'setCaseNoteInfo', calls an Oracle Utilities Network Management System API to read the current value of the order's event case notes. The value returned is concatenated with a space and the value of the CCN element. The resulting value is saved to the event's case notes using the function 'setCaseNoteInfo'.

Lines 42 to 47 set the 'no_dtr_flag' column in the 'picklist_info_upd_tr' table to 'Y', if the 'CompletionData/Type' element indicates that the trouble was not with the utility's equipment. The function 'isIn' returns true if its first parameter matches any one of the rest of its parameters, false otherwise

Lines 48 and 49 logs the change to the event by inserting a row into the picklist_completion_log table. If aggregate processing has been configured, and the intention is to save the data in the database for all events in the aggregation, the function 'picklistCompLog' would be more appropriate.

The following XML would be processed by the example input document

```
<FieldReportSave environment="Test" revision="1.0.0">
 <ApplicationArea>
   <Sender>
     <Component>MDS</Component>
     <Confirmation>Never</Confirmation>
     <AuthorizationId>MDS Interface</AuthorizationId>
   </Sender>
   <CreationDateTime>2003-05-01T14:30:17-05:00</CreationDateTime>
   <BODId>guid</BODId>
 </ApplicationArea>
 <DataArea>
  <JobNumber>MDS7704</JobNumber>
  <CompletionData>
   <System>4KV</System>
   <Type>Lateral</Type>
   <Failure>Fuse</Failure>
   <Cause>Animal</Cause>
   <InterruptDev>XFM12345678</InterruptDev>
   <Action>Fuse replaced</Action>
   <CustomerCaseNotes>Temporary Repair: Scheduled for Tuesday</
CustomerCaseNotes>
  </CompletionData>
 </DataArea>
</FieldReportSave>
```

DML Reference

This section contains a full reference for the dynamic message language used in the Generic IBM MQ Mobile Adapter configuration dml files.

Lexical Conventions

A dml configuration consists of one or more files. Each file is processed in turn to generate a sequence of tokens, which are further processed into internal data structures used at run time to generate XML documents and process XML documents.

Syntax notation

In the syntax notation used in this Appendix, syntactic categories are indicated by *italic* type, and literal words and characters in **bold** type. An optional part of the syntax is indicated by enclosing it in square brackets ([]). An ellipsis (…) indicates that the preceding part of the syntax can be optionally repeated an arbitrary number of times.

Tokens

There are seven kinds of tokens: names, strings, quoted strings, keywords, operators, and other separators. Blanks, tabs, line feeds, carriage returns, and comments (described below), are ignored except as they serve to separate tokens. Some white space is required to separate otherwise adjacent tokens.

Comments

The character # starts a comment which terminates at the end of the line on which it occurs.

Include Directive

The include directive can appear anywhere in an input file and takes the form:

`include` *`file name`*

The contents of the *file name* are processed as if they replaced the include directive itself.

Keywords

The following names are reserved for use as keywords and may not be used otherwise:

```
associate persist BasePath classTable ConfigDoc else elseif for if
include InputDoc OutputDoc queue RootElement sortIncidents sqlinsert
sqlselect sqlupdate static stop VERSION
```

The following characters are used as operators or for punctuation:

```
@  $  &  /  !  |  =  :  ,  "  ;  .  (  )  [  ]  <  >  {  } +
```

The following character combinations are used as operators:

```
==  !=  &&  ||
```

Names

A *name* is an arbitrarily long sequence of letters and digits. The first character must be a letter. The underscore _ counts as a letter. Upper and lower case letters are different. All characters are significant.

Strings

A *string* is an arbitrarily long sequence of letters and digits. . The underscore _ counts as a letter. Upper and lower case letters are different. All characters are significant.

Quoted Strings

A *quoted string* is an arbitrarily long sequence of characters, enclosed in double quotes "". To represent the double quote character in a quoted string, use two double quotes "".

Constants

A constant is one of:

- name
- string
- quoted string

Version Directive

The version directive takes the form:

```
VERSION = string;
```

The *VERSION* directive serves to identify the version of the current dml file and must appear outside any document definitions. When this directive is encountered, the current file name and the supplied version *string* are output to the log.

Basic Concepts

Type(s)

DML is a typeless language, or perhaps more accurately, a singly typed language. All values consist of character strings. DML has no concept of numbers. To illustrate this, *strings* can be used to pass positive integers to *functions*. For example:

```
@truncatedString = substring(@address, 0, 100);
```

However, *quoted strings* must be used to pass negative integers. For example:

```
@lastCharacter = substring(@characters, "-1", 1);
```

It should be emphasized that it is the *function*, not the dml that is interpreting the character string as an integer.

In certain contexts, a value is used as a *boolean*, or logical, value. Any non-empty string is considered *true*, and the empty string (written as "") is considered *false*. A *boolean expression* or *function* returns "Y" when *true* and "" when *false*.

Definitions and References

There are a number of value bearing *entities* in dml. Apart from one exception (*variables*), they must be defined before they are referenced. The definition introduces the *entity*, and defines certain modifiers to the *entity*. An *entity* is referenced when its value is used in an *expression* or when it is assigned to in an assignment *statement*. When a *variable* uses the default set of modifiers, it can be implicitly defined when first assigned.

Entities

The *entities* in a document carry values and have modifiers that change their behavior.

Variables

A *variable* is used to save intermediate results in a *document*. A *variable definition* takes the form:

```
@name:modifiers
```

The name must be unique amongst the *variables* within the document. Other entities can have the same name. The **:***modifiers* is optional.

If the **:***modifiers* are not required, variables can be implicitly defined when they are assigned to.

A *variable reference* takes the form:

@*name*

Variables can be set and referenced in all document types.

Elements

An *element* generates an XML element in Output Documents, and supplies an input XML element value or sub-elements in Input Documents. There are to kinds of *element* definitions: plain *elements* and array *elements*.

plain element definitions and an *array element definitions* are known collectively as *element definitions*.

Plain Element Definitions

Plain elements are referred to as *elements* in the rest of this section.

An *element definition* takes the form:

```
&name:modifiers < attribute definitions >
```

The name of an *element* is its XML tag, and must be unique amongst the *elements* within its immediately enclosing *element* or document. Other entities can have the same name. The **:***modifiers* and *attribute definitions* are optional. The format of *attribute definitions* is described below in section Attributes on page 5-59. *Elements* must either have values but no sub-elements or must have sub-elements but no value. (This may be changed in a future version of the adapter).

Array Element Definitions

Array elements can only appear in Input Documents, and are used when more that one element with the same tag can be sub-elements of the same element in the input XML. An *array element definition* takes one of two forms: with an unspecified index, and with a specified index attribute.

The unspecified index form is:

```
&name[]:modifiers < attribute definitions >
```

The specified index form is:

```
&name[name]:modifiers < attribute definitions > R(constant list)
```

where the name in square brackets is the name of the index attribute, and R(*constant list*) is the required index list, which is optional. The required index list defines the values of the index attribute that must be in the input XML before the enclosing Input Document will be used to process the input XML.

Array *element modifiers* can only contain an alternate name for the array *element*.

The name of an array *element* is its XML tag, and must be unique amongst the *elements* within its immediately enclosing *element* or document. Other entities can have the same name. The **:***modifiers* and *attribute definitions* are optional. The format of *attribute definitions* is described below in section Attributes on page 5-59. Array *Elements* must either have values but no sub-elements or must have sub-elements but no value.

Element References

The values of plain *elements* with values in Input Documents can be obtained using a *plain element reference* taking the form:

```
&element identifier
```

The *element identifier* has two forms:

The *full element path*, which is either the *name* of the element, if it is not a sub-element of another element, or the full element path of the sub-element's enclosing element, followed by a slash (/) followed by the element's *name*.

The element's alternate name, which is defined in the element's *modifiers*.

If the element has an alternate name, the full element path cannot be used.

The values of individual *elements* in an array *element* with values can be obtained using an *array element reference* taking the form:

```
&element identifier[index value]
```

The index value is either the value of the index attribute, in the case of a specified index, or a number in the case of an unspecified index, the elements being numbered in the order that the elements were in the input XML, starting at zero.

plain element references and an *array element references* are known collectively as *element references*.

Elements can only be referenced in Input Documents.

Attributes

An *attribute* generates an XML element attribute in Output Documents, and supplies an input XML element attribute value in Input Documents. An *attribute* definition is part of an *element's attribute definitions* and takes the form:

```
name:modifiers
```

The name of an *attribute* is its XML attribute, and must be unique amongst the *attributes* within its immediately enclosing *element* or document. Other entities can have the same name. The **:***modifiers* are optional.

In Output Documents *attributes* must have their values assigned to them where they are defined in the form:

```
NAME:modifiers = expression;
```

The definition of an *attribute* in an Input Document takes the form:

```
NAME:modifiers;
```

Attributes are defined as part of the *attribute definitions* of their *element* as described above in section These *attribute definitions* are one or more *attribute* definitions.

The values of an *attribute* can be obtained using an *attribute* reference taking the form:

```
element reference<name>
```

Attributes can only be referenced in Input Documents.

Entity Modifiers

There are three entity *modifiers*:

- The *flags* which modify the behavior of the entity. See section Flags on page 5-21 in the main document for the uses of flags.
- The *default value*, which is used when entity is referenced but has no value. See section Defaults on page 5-22 in the main document for the circumstances that the default is used.
- The *alternate name*, which is used to give the entity an alternate name. See section Alternate Names on page 5-23 in the main document for the circumstances that the alternate name is used.

The *modifiers* are defined in the order *flags*, *default value*, *alternate name* and take the form:

```
:constant:constant:name
```

If a *modifier* at the end of the *modifiers* is empty the colon (:) must not be present. As a consequence, if all modifiers are empty, the *modifiers* are not present

External Data

External data is available from the various external data objects, described above in section The External Objects on page 5-25. All fields in the objects can be read, but some objects or individual fields are read-only, i.e. they cannot be written.

A reference to an external object field takes the form:

```
$external data object identifier.field name
```

where the *external data object identifier* is the letter associated with the object and the *field name* is the *name* of the field (note that they are separated by a period (.)). Some fields (for example Handles) have sub-fields. A reference to a sub-field takes the form:

```
$external data object identifier.field name.sub-field name
```

Most external objects have one instance at a time, but the Incident Object can have zero, one or more, depending on the number of incidents that have grouped to the current event. To reference an individual incident field, an offset to the incident into the array of incidents is required. This offset starts at zero, and is a *constant* which must only contain digits, known as an *offset*. The normal order of incidents is the order that they were received by Oracle Utilities Network Management System. This order can be altered by use of the sortIncidents function. A reference to an incident field takes the form:

```
$I.offset.field name
```

Incident references can contain sub-fields.

These are known as external field references.

Note that some external object fields are read-only, *i.e.*, they cannot be set by the dml. The read-only status of each external object is listed below:

- The Order Object ('O'): All the fields listed in section Permanent Order Object Fields on page 5-148, Permanent Order Object Fields on page 5-148 of DML Function Calls on page 5-69 are read-only. All other fields are read/write.
- The Relationship Object ('R'): All the fields listed in section Permanent Relationship Object Fields on page 5-149, Permanent Relationship Object Fields on page 5-149 of DML Function Calls on page 5-69 are read-only. All other fields are read/write.
- The Event Object ('E'): All fields are read-only.
- The Incident Object('I'): All fields are read-only.
- The Global Data Object ('G'): All fields are read/write.
- The Trigger Parameter Object ('T'): All fields are read/write.

Functions

A *function* is called using the following form:

```
name([parameter1] [, parameter2]  …)
```

Where *name* is the name of the function and parameter2, parameter2, … are *expressions*. All functions return a value, but in some cases the value is always the empty string, implying that they are only called for their side effects. The functions available and their parameters are described in DML Function Calls on page 5-69.

Expressions

An expression is a combination of dml components that yield a value. Expressions are combined using operators. The following table shows the expressions and the operators:

Expression	Value	Notes
constant	The constant	
variable reference	The variable's current value	
element reference	The element's current value	
attribute reference	The attribute's current value	
external field reference	The field's current value	
function	The function's return value	
expression1 **+** *expression2*	The concatenation of the two *expressions*	
(*expression***)**	The expression's value	Used to alter the precedence of operators.
expression1 **?** *expression2* **:** *expression3*	If *expression1* is *true*, *expression2*. If *expression1* is *false*, *expression3*.	Logical alternation. See note below.
! *expression*	If *expression* is *true*, *false*. If *expression* is *false*, *true*.	Logical NOT.
expression1 && *expression2*	*true* if both *expression1* and *expression2* are *true*, *false* otherwise	Logical AND. See note below.
expression1 || *expression2*	*true* if either *expression1* or *expression2* is *true*, *false* otherwise	Logical OR. See note below.
expression1 == *expression2*	*true* if *expression1* is an exact duplicate of *expression2* is *true*, *false* otherwise	
expression1 != *expression2*	*true* if *expression1* is not an exact duplicate of *expression2* is *true*, *false* otherwise	

Note: The logical alternation, AND, and OR expressions are evaluated left to right and expressions that do not need to be evaluated are not evaluated, and any side effects (e.g., due to a function call) do not occur. Specifically:

Alternation: *expression1* is evaluated. If it is *true* only *expression2* is evaluated, otherwise only *expression3* is evaluated.

AND: *expression1* is evaluated. If it is *false*, *expression2* is not evaluated.

OR: *expression1* is evaluated. If it is *true*, *expression2* is not evaluated.

Lists

Name List

A *name list* is one or more *names* separated by commas (**,**). For example:

```
h_cls, h_idx
```

Constant List

A *constant list* is one or more *constants*, separated by commas (**,**). For example:

None, "$%I99", 13, "-3", "This is a ""quoted"" string"

Variable Reference Lists

A *variable reference list* is one or more *variable references*, separated by commas (**,**). For example:

```
@devPhases, @pole_number, @winter_load, @summer_load
```

Expression List

A *expression list* is one or more *expressions*, separated by commas (**,**). For example:

```
@a + @b, formatDateTime(@time), $E.outageHdl.idx, none
```

Statements

Statements are the basic processing units in dml. Many of them are terminated using the *statement terminator*, **;** (semi-colon).

Statement Blocks

A number of statements require one or more *statements* grouped together. This is achieved using a *statement block*, which takes the form:

```
{
   statements
}
```

Where *statements* is one or more *statements.*

Variable Assignment Statement

This statement assigns a value to a variable and takes the form:

```
variable reference = expression;
```

Element Definition Statement

Element definitions differ between elements with values (simple elements) and those with sub-elements (compound elements). They also differ between those in Output Documents (output elements) and those in Input Documents (input elements). The four flavors are described in the following sections.

Output Element Definition Statements

These statements are only valid in Output Documents.

Simple Output Element Definition Statement

This statement assigns a value to an element and takes the form:

```
element definition = expression;
```

Compound Output Element Definition Statement

This statement defines an element with one or more sub-elements and takes the form:

```
element definition
statement block
```

The statement block must contain at least one output element definition statement, but can also contain other statements allowed in Output Documents.

Input Element Definition Statements

These statements are only valid in Input Documents.

Simple Input Element Definition Statement

This statement defines an element that can accept a value from incoming XML documents and takes the form:

```
element definition;
```

Compound Input Element Definition Statement

This statement defines an element with sub-elements that can accept values value from incoming XML documents and takes the form:

```
element definition
statement block
```

The statement block can only contain input element definition statements and must contain at least one.

External Data Assignment Statement

This statement assigns a value to an external object field and takes the form:

```
external field reference = expression;
```

Function Statement

This statement is used to call a function for its side effects and the return value is either the empty string or can be ignored. It takes the form:

```
function expression;
```

SQL Select Statement

This statement is used to read data from the database and takes the form:

```
sqlselect variable reference list | name list | [static] expression [ |
expression …] ;
```

SQL Insert Statements

This statement is used to insert a row of data in a database table and takes the form:

```
sqlinsert expression | name list | expression list ;
```

SQL Update Statements

This statement is used to insert or update a row of data in a database table and takes the form:

```
sqlupdate expression | name list | expression list | name list |
expression list ;
```

If Statement

This statement is used to alter the flow of expression evaluation, and output element selection, based on the value of an expression. It takes the form:

```
if (expression)
   statement block 1
else if (expression)
   statement block 2
else

   statement block 3
```

elseif is a synonym for **else if**.

There can be any number of **else if**'s, including none. The **else** is optional.

If the *expression* of the **if** is *true*, it's *statement block* (1 in this example) is evaluated.

Otherwise, if the *expression* of the first **else if**, if any, is *true*, it's *statement block* (2 in this example) is evaluated.

Otherwise, if the *expression* of the next **else if**, if any, is *true*, it's *statement block* is evaluated.

Otherwise, the **else's** *statement block* (3 in this example) is evaluated.

A maximum of one *statement block* will be evaluated in any *if statement*.

For Statement

This statement is use to iterate through all elements in an array element. It can only appear in an Input Document. It takes the form:

```
for (&element identifier[], variable reference)
statement block
```

Stop Statement

This statement is used to terminate processing of a document. In addition, it prevents an Output Document from sending its XML. It takes the form:

```
stop;
```

Root Element Statement

This statement is used to generate an Output Document's root element and to select the Input Document or Documents that the input XML can be processed by. In an Output Document it is located in the document's *statement block*. In an Input Document it is located in the *input document header*. It takes the form:

```
&RootElement [ < attribute definitions > ] = expression ;
```

Documents

Output Document Header

The *output document header* consists of the following specifications, in any order.

Queue Specification

This specification specifies the queue to which the Output Document's XML is directed to, and takes the form:

```
queue = expression ;
```

The queue is available to the Output Document's statement block as a variable named queue, and can be assigned to in the following manner:

```
@queue = expression ;
```

The queue specification is optional, and defaults to the empty string. If the queue specification is defaulted, it must be set in the Output Document's statement block. There may only be a maximum of one queue specification in the header of each Output Document.

Trigger Specification

An Output Document must have at least one trigger specification, and can have an arbitrary number greater than one.

Association Specification

This specification associates the Output Document with an external object, and takes the form:

```
associate = external data object identifier ;
```

The only *external data object identifier* currently supported is **O**, the Order Object. One and only one Output Document must be associated with the Order Object.

Persistence Specification

This specification allows you to set the persistence flag for outgoing messages, and takes the form:

```
persist = "Y" or "N";
```

If this specification is omitted, the message will have the default persistence setting configured for the queue it is being placed on.

Output Document

This document is used to generate XML and send it to the MDS. It takes the form:

```
OutputDoc name
output document header
statement block
```

Input Document Header

The *input document header* consists of one and only one root element statement and the following specifications, in any order.

Queue Specification

This specification specifies the queue on which the Input Document's XML is received from, and takes the form:

```
queue = expression ;
```

The queue is available to the Input Document's statement block as a variable named queue.

There must be one and only one queue specification in the header of each Input Document.

Base Path Specification

The specification specifies the sub-element of the root element of the XML document which contains all elements that will be processed by the Input Document. It takes the form:

```
BasePath = full element path;
```

Input Document

This document is used to process input XML from the MDS. It takes the form:

```
InputDoc name
input document header
statement block
```

Configuration Document

This document is used to set configuration data and load configuration tables from the database at initialization time. It takes the form:

```
ConfigDoc name
statement block
```

Order of Document Processing and Other Considerations

The dml is read during adapter initialization in the order that the files are specified in the command line. Files from the command line must contain only complete documents, but files read using the **include** directive can contain any valid dml fragment, dependent on the context of the directive.

The processing of statements within a document is strictly from top to bottom in the order the statements were read during initialization, except when altered by a control flow statement (for example, **if** and **for** statements). Statements in a document are processed until one of the following situations occur:

The last statement in the document is reached. If the document is an Output Document, the resulting XML is delivered to the queue specified in the document's queue specification.

A **stop** statement is processed. If the document is a Configuration Document, the adapter sends an error message to the log and then exits.

A run time configuration error occurs. In all cases, the adapter sends an error message to the log and then exits.

An unrecoverable run time error occurs (for example, DBService is not available to read or write a database table). In all cases, the adapter sends an error message to the log and then exits.

The processing of specifications in a document header is not necessarily in top to bottom order. Each document is described below.

Output Documents

Output Document specifications are processed in the following order:

The association specification is processed once during initialization.

The queue specification is evaluated just before the first statement of the document is processed.

When a trigger event occurs, all Output Documents are examined in top to bottom order to determine whether the event should trigger each document.

If the trigger event's type matches at least one trigger specification in the document, the triggers of that type are processed in top to bottom order, until one evaluates to *true*. In this case, all other triggers have their value set to *false*, even if they have not been processed. If all triggers evaluate to *false* the document is not processed due to the trigger event.

If the Output Document is triggered, it is fully processed before the next Output Document is examined in order to determine whether the event should trigger the next document.

Input Documents

All Input Document header specifications are evaluated at initialization, in the order base path specification, queue specification, and then root element specification.

When an input XML document arrives, each Input Document is examined in top to bottom order to determine whether the XML satisfies the root element specification. If no document matches the incoming XML, the XML is discarded. If at least one Input Document is eligible, the elements in the XML are delivered to the documents in the order they appear in the XML document. Once all elements have been delivered, each document is examined in top to bottom order to determine whether all required elements are present, and are processed in top to bottom order if the elements are present. Once all Input Documents have been processed, the XML is discarded.

Configuration Documents

Configuration Documents have no header specifications. All Configuration Documents are processed in top to bottom order. Once they all have been processed successfully, they are discarded.

Ordering of Incidents in the Incident Object

When processing starts for a document, the incidents in the Incident Object are in their normal order, i.e. the order that they were received by Oracle Utilities Network Management System. This order can be changed during the processing of the document by calling the sortIncidents function. The ordering remains the same during the processing, unless sortIncidents is called again. The order is set back to normal when the document processing finishes.

Interactions between Threads

The adapter is a multi-threaded process. Therefore more than one document can be processed at the same time, increasing performance. There is at least one thread for Output Document processing, and at least one thread for each Input Document queue. More threads can be configured using a Configuration Document. The adapter uses a number of other threads for internal processing.

This has a number of implications.

While trigger events are queued internally in the order that they occur, and are extracted from this queue in the order that they were queued, there is no guarantee that the Output Documents triggered by these events will complete their processing in the order the events were queued. This means the XML messages may be delivered to the MQSeries queue in an

unexpected order. If this behavior is inappropriate, it can be eliminated at the expense of performance by using only one output thread, and by setting the config_Event_QueueDelay configuration parameter to zero.

A similar situation exists with input XML documents. They also cannot be guaranteed to update Oracle Utilities Network Management System in the order that they arrive. This situation can be improved at the expense of performance by limiting each input queue to one thread. It may be possible to eliminate it completely if the interface can be configured to use only one input queue.

Note that trigger events and input XML that affect particular Oracle Utilities Network Management System events, Order Objects, and Relationship Objects are processed in the order that they are queued. These situations are discussed below.

Note, however, that there is an inherent race condition in loosely coupled interfaces (the type implemented by the adapter) that use messages to communicate. Events can occur in Oracle Utilities Network Management System and the MDS that alter the state of Oracle Utilities Network Management System events and MDS orders almost simultaneously and it cannot be predicted whether the change on one system affects the other system first, or vice versa. Paradoxically, this situation can be improved by increasing the rate at which messages are processed, i.e. by increasing the number of threads.

The input, output, and internal threads need to coordinate access to various shared resources. Most of this coordination is invisible on the dml level, but a number of aspects of the coordination are worth consideration when writing dml.

One specific means of coordination is known as a mutex (for mutual exclusion). To access a shared resource that is protected by a mutex, the thread requests the mutex. If the mutex is free, the thread acquires the mutex. If another thread requests the mutex, it blocks (is suspended) until it is free. When the original thread has finished accessing the shared resource, it releases the mutex, making it free. The release unblocks one thread waiting for the mutex. When there is the potential for more than one mutex to be in use, there is a danger of a deadlock if one thread enters the mutexes in a different order from another thread. One a deadlock occurs, neither thread will ever run again.

Each thread runs in a separate environment, with a copy of each relevant document, but needs to share a number of resources. The access to these objects must be properly coordinated to prevent inconsistent access due to multiple threads updating the resource at the same time. These resources and the mechanisms used to prevent inconsistent access are:

- The Global Data Object: The update of a single field is atomic (the update will be complete before any other thread can attempt to read or update the field). There is no coordination of updates to multiple fields. To avoid this problem, use a single field.
- The Order Object: There is one Order Object for each order that has been created. Access to an individual Order Object is coordinated so that only one document can access the Order Object at one time. When a document in a thread needs to access an Order Object it calls findOrder. When successful, findOrder acquires the order's mutex, preventing any other thread from accessing the Order Object. The order's mutex is automatically acquired when the order is created by calling createOrder. The order's mutex is automatically released in the following cases: when the document processing is terminated, and when findOrder or createOrder is called. This is to prevent deadlocks. A consequence of this is that if a trigger event triggers two Output Documents needing the same order, or two Input Documents are triggered by one input XML message, the state of the order when the second document starts processing is not guaranteed to be the same, because another thread may have altered its state.
- The Relationship Object: There is one Relationship Object for each relationship that has been created. Access to an individual Relationship Object is coordinated so that only one document can access the Relationship Object at one time. When a document

in a thread needs to access a Relationship Object it calls findRelation. When successful, findRelation acquires the relationship's mutex, preventing any other thread from accessing the Relationship Object. The relationship's mutex is automatically acquired when the relationship is created by calling createRelation. The relationship's mutex is automatically released in the following cases: when the document processing is terminated, and when findRelation or createRelation is called. This is to prevent deadlocks. A consequence of this is that if a trigger event triggers two Output Documents using needing the same relationship, or two Input Documents are triggered by one input XML message, the state of the relationship when the second document starts processing is not guaranteed to be the same, because another thread may have altered its state. In addition, when findOrder or createOrder is called, the mutex for the order's relationship is automatically acquired. This has the consequence that calling findOrder or createOrder after calling findRelation causes a configuration error if the order is not in the relationship. Similarly, calling findRelation after calling findOrder or createOrder causes a configuration error if the order is not in the relationship. This behavior is necessary to prevent deadlocks.

- The current event: SRSoutput message for the same event must be processed in the order that they were sent by JMService, otherwise the MDS will not receive up to date data. This prevented by a mutex that is acquired before the SRSoutput message is processed, and released automatically when it has been processed.

DML Function Calls

The importance of meeting the prerequisite specifications for all functions cannot be emphasized too much. If a prerequisite is not met, the adapter will exit with a fatal error message. Some of the prerequisites are written is short form because they are so common. An explanation of how to meet these prerequisites follows:

- The current crew is set: The current crew is set by a successful call to the createCrew function, and by any of the findCrew… functions.
- The current order is set: the current order is set by the createOrder and findOrder functions.
- The current event is set: the current event is set when the current order is set, when an OutputDocument has been triggered by the arrival of an SRSoutput message, and when a call to findEventObject is successful.
- The current damage report is set: the current damage report is set by a call to createDamage, findDamage, findDamageByExternalId, or findOrCreateDamage

In addition, access to the E (event), I (incident), O (order) and R (relation) objects will only work if their prerequisites are met. If these are not met, the adapter does not exit, but all accesses fail, meaning no data can be read or written. Their prerequisites are:

- E: the current event is set.
- I: the current event is set (and it has incidents)
- O: the current order is set.
- R: the current relation is set by a call to findRelation.

List of Functions

Crew Functions

These functions create and update crews.

createCrew

Create a new crew.

SYNOPSIS

createCrew(crew ID, crew field, data, [crew field, data], ...)

PARAMETERS

crew ID	The crew ID
crew field	The crew field to update.
crewType	calls Crew::crewType() API
zoneName	calls Crew::zoneName() API
crewSize	calls Crew::crewSize() API
contact	calls Crew::contact() API
crewId	calls Crew::crewId() API
mobileNum	calls Crew::mobileNum() API
pagerNum	calls Crew::pagerNum() API
zoneHdl	calls Crew::zoneHdl() API
crewCategory	calls Crew::crewCategory() API
crewCenter	calls Crew::crewCenter() API
crewGroup	calls Crew::crewGroup() API
crewSupervisor	calls Crew::crewSupervisor() API
externalKey	calls Crew::externalKey() API
data	The data written to the crew field

Note: If the Crew Icons Window is used make sure that the following crew fields: crewType, contact, zoneName, zoneHdl, crewCategory, crewCenter, crewSupervisor, are included otherwise the new crew will not appear in the Window.

PREREQUISITE

The crew field parameters are valid.

DESCRIPTION

Create a new crew with the specified information using the Crew::createCrew API. If successful, set the current crew to the new crew.

RETURN VALUE

True when successful.

False when unsuccessful.

A crew with the specified crew ID exists. This can be determined by a call to findCrewById().

The Crew::createCrew() API call fails.

Note that the current crew is not set if the call fails.

DIAGNOSTICS

Error messages are output to the error log.

deleteCrew

Deletes the crew with the specified crew ID

SYNOPSIS
deleteCrew(crewID)

PARAMETERS

crewID	The crew ID.

PREREQUISITE
None.

DESCRIPTION
Deletes the crew with the specified crew ID.

RETURN VALUE
True when successful.

False when unsuccessful.

DIAGNOSTICS
None.

findCrewById

Find an active or inactive crew based on its crew ID

SYNOPSIS
findCrewById(crew ID)

PARAMETERS

crew ID	The crew ID.

PREREQUISITE
None.

DESCRIPTION
Find the crew with the specified crew ID.

RETURN VALUE
True when successful. The current crew is set to the crew that was found.

False when unsuccessful.

DIAGNOSTICS
None.

findCrewByExternalKey

Find an active or inactive crew based on its external key

SYNOPSIS
findCrewByExternalKey(externalKey)

PARAMETERS

externalKey	The external key.

PREREQUISITE
None.

DESCRIPTION
Find the crew with the specified external key.

RETURN VALUE
True, when successful. The current crew is set to the crew that was found.

False when unsuccessful.

DIAGNOSTICS
Error messages are output to the error log.

findCrewByIdSubStr

Find an active or inactive crew based on a substring of the crew ID

SYNOPSIS
findCrewByIdSubStr(string)

PARAMETERS

string	A string.

PREREQUISITE
None.

DESCRIPTION
Find a crew whose crew ID contains the string.

RETURN VALUE
True when successful. The current crew is set to the crew that was found.

False when unsuccessful.

DIAGNOSTICS
None.

findCrewByExtKeySubStr

Find an active or inactive crew based on a substring of its external key

SYNOPSIS
findCrewByExternalKey(string)

PARAMETERS

string	A string.

PREREQUISITE
None.

DESCRIPTION
Find a crew whose external key contains the string.

RETURN VALUE
True, when successful. The current crew is set to the crew that was found.

False when unsuccessful.

DIAGNOSTICS
Error messages are output to the error log.

findCrewByEventIdx

Find a crew which is associated with the given event.

SYNOPSIS
findCrewByEventIdx(eventIdx)

PARAMETERS

eventIdx	Event index.

PREREQUISITE
None.

DESCRIPTION
Find a crew which is assigned (including suspended), en-route or onsite for the event with the given event index.

The first crew found is returned. Assigned/suspended crews are searched first.

RETURN VALUE
True when successful. The current crew is set to the crew that was found.

False when unsuccessful.

DIAGNOSTICS
None.

returnCrewKeyById
Return crew key for the given crew id.

SYNOPSIS
returnCrewKeyById(crewID)

PARAMETERS

crewID	Crew ID.

PREREQUISITE
None.

DESCRIPTION
Searches active and inactive crews for a crew with the given crew id. Returns the key of the found crew.

RETURN VALUE
Found crew key of an empty string if nothing was found.

DIAGNOSTICS
None.

updateCrew
Update the current crew's information.

SYNOPSIS
updateCrew(crew field, data, [crew field, data], ..)

PARAMETERS

crew field	The crew's field to update.
crewType	calls Crew::crewType() API
zoneName	calls Crew::zoneName() API
crewSize	calls Crew::crewSize() API
contact	calls Crew::contact() API
crewId	calls Crew::crewId() API
mobileNum	calls Crew::mobileNum() API
pagerNum	calls Crew::pagerNum() API
zoneHdl	calls Crew::zoneHdl() API

crewCategory	calls Crew::crewCategory() API
crewCenter	calls Crew::crewCenter() API
crewGroup	calls Crew::crewGroup() API
crewSupervisor	calls Crew::crewSupervisor() API
externalKey	calls Crew::externalKey() API
data	The data written to the crew field

PREREQUISITE
The current crew is set.

The crew field parameters are valid.

DESCRIPTION
Update the current crew's crew field with data and invoke the Crew::commit() API to commit the changes.

RETURN VALUE
True when successful.

False when unsuccessful.

The Crew::commit() API call fails.

DIAGNOSTICS
Error messages are output to the error log.

dispatchCrew
Dispatch the current crew to the current order

SYNOPSIS
dispatchCrew()

PARAMETERS
None.

PREREQUISITE
The current crew is set.

The current order is set.

DESCRIPTION
If the crew is already dispatched to another event, the previous dispatch is changed to an assignment.

Invoke the Crew::dispatch() API for the order's active event. If the order is aggregated, assign the crew to the other events.

RETURN VALUE
The empty string.

DIAGNOSTICS
Error messages are output to the error log.

arriveCrew
Update the current crew's information to reflect that the crew has arrived on site for an order.

SYNOPSIS
arriveCrew()

arriveCrew(time)

PARAMETERS

time	The time the crew arrived in internal format. If this parameter is not supplied, the current time is used.

PREREQUISITE
The current crew is set.

The current order is set.

DESCRIPTION
If the crew is not dispatched to the order, the crew is dispatched to the order, using the logic described in the description of the 'dispatchCrew' function.

If the time is zero or invalid it is set to the current time

Invoke the CrewDispatch::arrived() API for the order's active event.

RETURN VALUE
The empty string.

DIAGNOSTICS
Error messages are output to the error log.

assignCrew

Assign the current crew to the current order

SYNOPSIS
assignCrew()

PARAMETERS
None.

PREREQUISITE
The current crew is set.

The current order is set.

DESCRIPTION
If the crew is dispatched to the order, undispatch it.

Invoke the Crew::assign() API for all events associated with the order.

RETURN VALUE
The empty string.

DIAGNOSTICS
Error messages are output to the error log.

assignCrewsToAllRelatedEvents

SYNOPSIS
assignCrewsToAllRelatedEvents()

PARAMETERS
None.

PREREQUISITE
The current relation is set.

DESCRIPTION
This function makes sure that if a crew is assigned to one of the related events then it is also assigned to all of the event which are part of the same relation.

RETURN VALUE
'Y' on success, the empty string in current relation is not set.

DIAGNOSTICS
Error messages are output to the error log.

unassignCrew

Unassign the current crew from the current order

SYNOPSIS
unassignCrew()

PARAMETERS
None.

PREREQUISITE
The current crew is set.

The current order is set.

DESCRIPTION
If the crew is assigned or dispatched to any events associated with the order, invoke the Crew::unassign() API or Crew::undispatch API, respectively, for the events.

RETURN VALUE
The empty string.

DIAGNOSTICS
Error messages are output to the error log.

unassignCrewByKey

NAME:
unassignCrewByKey Unassign the crew with the given crew key from the current order

SYNOPSIS
unassignCrewByKey(crewKey)

PARAMETERS
crewKey crew key

PREREQUISITE
The current order is set.

DESCRIPTION
Unassign the crew with the given crew key from any events associated with the current order.

RETURN VALUE
The empty string.

DIAGNOSTICS
Error messages are output to the error log.

suspendCrew

NAME:
suspendCrew Suspends the current crew from the current order

SYNOPSIS
suspendCrew()

PARAMETERS
None.

PRE-REQUISITE:
The current crew is set.

The current order is set.

DESCRIPTION
Suspends the current crew from the current order.

RETURN VALUE
The empty string.

DIAGNOSTICS
Error messages are output to the error log.

activateCrew

NAME:
activateCrew Change the state of the current crew to active or inactive.

SYNOPSIS
activateCrew(state)

PARAMETERS
state The state of the crew.

- **Y**: Activate the current crew.
- **N**: Deactivate the current crew, set it off-shift, and remove all crew assignments and jobs.

PREREQUISITE
The current crew is set.

DESCRIPTION
Invoke Crew::setActivation() API.

RETURN VALUE
True when successful.

False when unsuccessful.

The assignments and jobs cannot be removed from the current crew

The Crew::setActivation() API call fails.

DIAGNOSTICS
Error messages are output to the error log.

availableCrew

NAME:
availableCrew Change the availability of the current crew.

SYNOPSIS
availableCrew(state)

PARAMETERS
state The availability of the crew

- **Y**: Make the current crew available.
- **N**: Make the current crew unavailable; remove all crew assignments and jobs.

PREREQUISITE
The current crew is set.

DESCRIPTION
Invoke Crew::setAvailability() API.

RETURN VALUE
True when successful.

False when unsuccessful.

The assignments and jobs cannot be removed from the current crew

The Crew::setAvailability() API call fails.

DIAGNOSTICS
Error messages are output to the error log.

setCrewAvailability

NAME:
setCrewAvailabilityChange the availability of the current crew.

SYNOPSIS
setCrewAvailability(state, when, reason)

PARAMETERS
state The availability of the crew

- **Y**: Make the current crew available.
- **N**: Make the current crew unavailable.

when The time when crew availability change.

reason The reason why the crew is unavailable. Only used when state is 'N'.

PREREQUISITE
The current crew is set.

DESCRIPTION
Changes availability of the current crew.

RETURN VALUE
True.

DIAGNOSTICS
Error messages are output to the error log.

releaseCrews

NAME:
releaseCrews Release all crews from the current order.

SYNOPSIS
releaseCrews

PARAMETERS
None.

PREREQUISITE
Current order is set.

DESCRIPTION
Undispatch and unassign all crews related to the current order.

RETURN VALUE
The empty string.

DIAGNOSTICS
Error messages are output to the error log.

releaseCrewsLocal

Internally release all crews from the current order.

SYNOPSIS
releaseCrewsLocal

PARAMETERS
None.

PREREQUISITE
Current order is set.

DESCRIPTION
Internally release all crews from the current order and does not send any crew messages to NMS. This function only updates the adapter's memory.

RETURN VALUE
The empty string.

DIAGNOSTICS
Error messages are output to the error log.

crewActive

Determine if the current crew is active.

SYNOPSIS
crewActive()

PARAMETERS
None

PREREQUISITE
The current crew is set.

DESCRIPTION
Invoke Crew::isActive() API.

RETURN VALUE
True, when the current crew is active.

False, when current crew is not active.

DIAGNOSTICS
Error messages are output to the error log.

setCrewOnShift

Change the state of the current crew to on shfit or off shift.

SYNOPSIS
setCrewOnShift(onShift, time)

PARAMETERS

onShift — The state of the crew

- **Y**: Set the current crew to on-shift. This will also activate the crew if it is currently inactive.
- **N**: Set the current crew to off-shift and suspend any jobs.

time — The time the crew shift change occurred. If this parameter is not supplied, the current time is used.

PREREQUISITE
The current crew is set.

DESCRIPTION
Invoke Crew::setOnShift() API.

RETURN VALUE
True when successful.

False when unsuccessful.

The Crew::setOnShift() API call fails.

DIAGNOSTICS
Error messages are output to the error log.

crewOnShift

Determine if the current crew is on shift.

SYNOPSIS
crewOnShift()

PARAMETERS
None

PREREQUISITE
The current crew is set.

DESCRIPTION
Invoke Crew::isOnShift() API.

RETURN VALUE
True, when the current crew is on shift.

False, when current crew is not on shift.

DIAGNOSTICS
Error messages are output to the error log.

crewOutOfRange

Change the out-of-range status state of the current crew.

SYNOPSIS
crewOutOfRange(outOfRange)

PARAMETERS
outOfRange The out-of-range status of the crew

- **Y**: Set the current crew to be out of range.
- **N**: Set the current crew to be in range.

PRE-REQUISITE:
The current crew is set.

DESCRIPTION
Sets out-of-range status of the current crew.

RETURN VALUE
True when successful.

False when unsuccessful.

DIAGNOSTICS
Error messages are output to the error log.

crewIsMobile

Determine if the current crew is mobile.

SYNOPSIS
crewIsMobile()

PARAMETERS
None

PREREQUISITE
The current crew is set.

DESCRIPTION
Checks that mobile flag of the current crew is not equal to N.

RETURN VALUE
True, when the current crew is mobile.

False, when current crew is not mobile.

DIAGNOSTICS
Error messages are output to the error log.

crewIsCurrentlyMobile

Determine if the current crew is mobile at this time.

SYNOPSIS
crewIsCurrentlyMobile()

PARAMETERS
None

PREREQUISITE
The current crew is set.

DESCRIPTION
Checks that mobile flag of the current crew is set to Y. This excludes crews which are normally mobile but are currently overridden to allow dispatching from NMS.

RETURN VALUE
True, when the current crew is currently mobile.

False, when current crew is currently not mobile.

DIAGNOSTICS
Error messages are output to the error log.

setVehicleId
Update the current crew's vehicle information.

SYNOPSIS
setVehicleId(unused, vehicleNumber, vehicleType)

PARAMETERS

unused	This parameter is not used.
vehicleNumber	The vehicle number.
vehicleType	The vehicle type name.

PREREQUISITE
The current crew is set.

The crew field parameters are valid.

DESCRIPTION
Update the current crew`s vehicle information. If crew with given vehicle number exists then it will be used. If existing vehicle is inactive it will be activated. If crew with given vehicle number does not exist then new vehicle record will be created.

RETURN VALUE
True, when successful.

False, when unsuccessful.

DIAGNOSTICS
Error messages are output to the error log.

updateCrewCoordinates
Update the current crew's coordinates as well as its speed and heading.

SYNOPSIS
updateCrewCoordinates(x, y, speed, heading)

PARAMETERS

x	The X coordinate of the current crew.
y	The Y coordinate of the current crew.
speed	The speed of the current crew.

heading	The heading of the current crew (0 to 359, where 0 is North, 90 is East, 180 is South, 270 is West).

PREREQUISITE
The current crew is set.

DESCRIPTION
Updates the current crew's coordinates as well as its speed and heading.

Coordinate values must be in the coordinate system used within NMS. This function does not perform conversion between different coordinate systems.

RETURN VALUE
True when successful.

False when unsuccessful.

DIAGNOSTICS
Error messages are output to the error log.

orderCrewStatus

Returns the highest crew status for the current order.

SYNOPSIS
orderCrewStatus()

PARAMETERS
None.

PREREQUISITE
The current order is set.

DESCRIPTION
Returns the highest crew status for the current order. Crew status priority (highest to lowest):

- onsite
- en-route
- assigned

RETURN VALUE
'O' if a crew is onsite, 'D' if a crew is en-route, 'A' if a crew is assigned, otherwise empty string.

DIAGNOSTICS
Error messages are output to the error log.

getOrderCrews

Returns comma-separated list of crew ids assigned to the specified order

SYNOPSIS
getOrderCrews(orderNumber)

PARAMETERS

orderNumber	The order number.

PREREQUISITE
The current order is set.

DESCRIPTION
Returns comma-separated list of crew ids assigned to the specified order.

RETURN VALUE
Comma-separated list of crew ids.

DIAGNOSTICS
Error messages are output to the error log.

Code Mapping Tables

The code mapping tables and views are used to translate values in Oracle Utilities Network Management System to and from the equivalent values in the messages to and from the MDS. These tables are cached to improve performance.

loadMapConfigTable

Cache the contents of a table supplying information for the mapping tables.

SYNOPSIS
loadMapConfigTable(table)

PARAMETERS

table	A table name.

PREREQUISITE
None.

DESCRIPTION
Read and cache table.

RETURN VALUE
True, when successful.

False, otherwise.

DIAGNOSTICS
Error messages are output to the error log.

loadMapTable

Cache the contents of a mapping table.

SYNOPSIS
loadMapTable(name)

PARAMETERS

name	The name of the mapping table.

PREREQUISITE
The table, name, exists in the database.

DESCRIPTION
Read the contents of name and cache its values.

RETURN VALUE
True, when successful.

False, otherwise.

DIAGNOSTICS
Error messages are output to the error log.

mapTableStr

Return a string given its reference code

SYNOPSIS

mapTableStr(name, code)

PARAMETERS

name	A mapping table name
code	A reference code to a string.

PREREQUISITE

The table, name, exists in the database.

DESCRIPTION

Check if the table, name exists in memory, if not, call loadMapTable to load it.

Look up the string that corresponds to code and return the string. If code is not found, but a default string exists, the default value is returned, otherwise return the empty string.

RETURN VALUE

The string when successful.

The empty string when code is not found.

DIAGNOSTICS

Error messages are output to the error log.

mapTableCode

Return a code given its reference string

SYNOPSIS

mapTableCode(name, string)

PARAMETERS

name	A mapping table name
string	A string

PREREQUISITE

The table (name) exists in the database.

DESCRIPTION

Check if the table name exists in memory; if not, call loadMapTable to load it.

Look up the code that corresponds to string and return the code. If string is not found, but a default code exists, the default code is returned, otherwise return the empty string.

RETURN VALUE

The code when successful.

The empty string when string is not found.

DIAGNOSTICS

Error messages are output to the error log.

Damage Assessment Functions

These functions creates and updates damage reports.

createDamage

Create an empty damage report instance.

SYNOPSIS
createDamage()

PARAMETERS
None.

PREREQUISITE
None.

DESCRIPTION
Creates an empty damage report instance. This function does not create a new damage report in NMS but rather creates damage report object in DML, which can then be populated and saved to actually create new or update existing damage report.

RETURN VALUE
None.

DIAGNOSTICS
None.

findDamage
Load an existing damage report by id.

SYNOPSIS
findDamage(reportId)

PARAMETERS

reportId	unique damage report identifier (stored in the DAMAGE_REPORT.REPORT_ID database column)

PREREQUISITE
None.

DESCRIPTION
Loads damage report for the given identifier. If no damage report with such identifier exists then empty damage report instance is created.

RETURN VALUE
True, if existing damage report was found and loaded.

False, if existing damage report was not found and empty one was created.

DIAGNOSTICS
Error messages are output to the error log.

findDamageByExternalId
Load an existing damage report by external identifier.

SYNOPSIS
findDamageExternalId(externalId)

PARAMETERS
externalId external damage report identifier

PREREQUISITE
None.

DESCRIPTION
Loads damage report for the given external identifier. If no damage report with such identifier exists then empty damage report instance is created.

RETURN VALUE
True, if existing damage report was found and loaded.

False, if existing damage report was not found and empty one was created.

DIAGNOSTICS
Error messages are output to the error log.

findOrCreateDamage

Create a damage report for an device outage

SYNOPSIS
findOrCreateDamage(event)

PARAMETERS

event	An event handle.

PREREQUISITE
None.

DESCRIPTION
Load the damage report for event. If no damage report exists for the event, create it.

RETURN VALUE
True, if the damage report was created.

False, if the damage report existed before the call.

DIAGNOSTICS
Error messages are output to the error log.

damageSetCrewId

Update the damage report with a crew ID

SYNOPSIS
damageSetCrewId(crewId)

PARAMETERS

crewId	A crew ID.

PREREQUISITE
The current damage report is set.

DESCRIPTION
The crew ID field in the damage report is updated with crewId.

RETURN VALUE
The empty string.

DIAGNOSTICS
Error messages are output to the error log.

damageSetRadioNum

Update the damage report with a crew mobile ID (radio number)

SYNOPSIS
damageSetRadioNum(mobileId)

PARAMETERS

mobileId	A crew mobile ID (radio number).

PREREQUISITE
The current damage report is set.

DESCRIPTION
The Mobile # field in the damage report is updated with mobileId.

RETURN VALUE
The empty string.

DIAGNOSTICS
Error messages are output to the error log.

damageSetReportTime

Update the damage report with a time

SYNOPSIS
damageSetReportTime(time)

PARAMETERS
time A time.

PREREQUISITE

The current damage report is set

DESCRIPTION
The reported time field in the damage report is updated with time.

RETURN VALUE
The empty string.

DIAGNOSTICS
Error messages are output to the error log.

damageSetEvent

Set event handle in newly created damage report

SYNOPSIS
damageSetEvent(event)

PARAMETERS
event An event handle.

PREREQUISITE

The current damage report is set.

DESCRIPTION
Sets event handle in newly created damage report. This would cause this damage report to be associated with the specified event. It is an error to call this function for an existing damage report.

RETURN VALUE
None.

DIAGNOSTICS
Error messages are output to the error log.

damageSetExternalId

Set external id in newly created damage report

SYNOPSIS
damageSetEvent(externalId)

PARAMETERS
externalId An external identifier for this damage report.

PREREQUISITE
The current damage report is set.

DESCRIPTION
Sets external identifier in newly created damage report. If provided the external identifier should be unique. It is an error to call this function for an existing damage report.

RETURN VALUE
None.

DIAGNOSTICS
Error messages are output to the error log.

damageSetDevice
Set device alias in damage report

SYNOPSIS
damageSetDevice(deviceAlias)

PARAMETERS
deviceAlias A device alias.

PREREQUISITE
The current damage report is set.

DESCRIPTION
Sets device alias in damage report. For newly created damage report this would cause it to be placed on the specified device unless event handle is also set in which case damage report is placed on the outage device. Setting device alias for an existing damage report would cause it to be moved to the new device.

RETURN VALUE
None.

DIAGNOSTICS
None.

damageSetAddress
Update the damage report with an Address

SYNOPSIS
damageSetAddress(Address)

PARAMETERS
Address An Address.

PREREQUISITE
The current damage report is set

DESCRIPTION
The Address field in the damage report is updated with Address.

RETURN VALUE
The empty string.

DIAGNOSTICS
Error messages are output to the error log.

damageSetFeederName

Update the damage report with a feeder name

SYNOPSIS
damageSetFeederName(feeder name)

PARAMETERS

feeder name	A feeder name.

PREREQUISITE
The current damage report is set

DESCRIPTION
The feeder name field in the damage report is updated with feeder name.

RETURN VALUE
The empty string.

DIAGNOSTICS
Error messages are output to the error log.

damageSetNcg

Update the damage report with an ncg

SYNOPSIS
damageSetNcg(ncg)

PARAMETERS

ncg	An ncg.

PREREQUISITE
The current damage report is set

DESCRIPTION
The ncg field in the damage report is updated with ncg.

RETURN VALUE
The empty string.

DIAGNOSTICS
Error messages are output to the error log.

damageSetRepairMinutes

Sets repair minutes for a damage report.

SYNOPSIS
damageSetRepairMinutes(number of minutes)

PARAMETERS

minutes	The number of minutes.

PREREQUISITE
The current damage report is set

DESCRIPTION
Sets repair minutes for a damage report. Setting to negative values causes repair minutes to be recalculated from the entered damage type information

RETURN VALUE
The empty string.

DIAGNOSTICS
Error messages are output to the error log.

damageSetZoneName
Update the damage report with a zone name

SYNOPSIS
damageSetZoneName(zone name)

PARAMETERS

zone name	A zone name.

PREREQUISITE
The current damage report is set

DESCRIPTION
The zone name field in the damage report is updated with zone name.

RETURN VALUE
The empty string.

DIAGNOSTICS
Error messages are output to the error log.

damageSetGrid
Update the damage report with a grid number

SYNOPSIS
damageSetGrid(grid)

PARAMETERS

grid	A grid number.

PREREQUISITE
The current damage report is set

DESCRIPTION
The grid field in the damage report is updated with grid.

RETURN VALUE
The empty string.

DIAGNOSTICS
Error messages are output to the error log.

damageSetCity
Update the damage report with a city name

SYNOPSIS
damageSetCity(city)

PARAMETERS

city	A city name.

PREREQUISITE
The current damage report is set

DESCRIPTION
The city field in the damage report is updated with city.

RETURN VALUE
The empty string.

DIAGNOSTICS
Error messages are output to the error log.

damageSetSection

Update the damage report with the section affected.

SYNOPSIS
damageSetSection(section)

PARAMETERS

section	The section affected.

PREREQUISITE
The current damage report is set

DESCRIPTION
The section field in the damage report is updated with section.

RETURN VALUE
The empty string.

DIAGNOSTICS
Error messages are output to the error log.

damageSetLocation

Update the damage report with the affected location

SYNOPSIS
damageSetLocation(location)

PARAMETERS

location	The affected location.

PREREQUISITE
The current damage report is set

DESCRIPTION
The location field in the damage report is updated with location.

RETURN VALUE
The empty string.

DIAGNOSTICS
Error messages are output to the error log.

damageSetPhase

Update the damage report with the phases affected

SYNOPSIS
damageSetPhase(phase)

PARAMETERS
phase The affected phases.

PREREQUISITE
The current damage report is set

DESCRIPTION
The phase field in the damage report is updated with phase.

RETURN VALUE
The empty string.

DIAGNOSTICS
Error messages are output to the error log.

damageSetLoadAffected

Update the damage report with the affected load.

SYNOPSIS
damageSetLoadAffected(loadAffected)

PARAMETERS
loadAffected The load affected.

PREREQUISITE
The current damage report is set

DESCRIPTION
The load affected field in the damage report is updated with loadAffected.

RETURN VALUE
The empty string.

DIAGNOSTICS
Error messages are output to the error log.

damageSetText1 - damageSetText5

NAME:
Update misc_textN in the damage report, where *N* is a number from 1 to 5.

SYNOPSIS
damageSetTextN(text)

PARAMETERS
text A value.

PREREQUISITE
The current damage report is set

DESCRIPTION
The misc_textN field in the damage report is updated with text.

RETURN VALUE
The empty string.

DIAGNOSTICS
Error messages are output to the error log.

damageSetOption1 - damageSetOption5

Update misc_optionN field in the damage report, where N is number from 1 to 5.

SYNOPSIS
damageSetOptionN(text)

PARAMETERS
text A value.

PREREQUISITE
The current damage report is set

DESCRIPTION
The misc_optionN field in the damage report is updated with text.

RETURN VALUE
The empty string.

DIAGNOSTICS
Error messages are output to the error log.

damageSetComment1

Update the damage report with a comment

SYNOPSIS
damageSetComment1(text)

PARAMETERS
text A text.

PREREQUISITE
The current damage report is set

DESCRIPTION
The comment1 field in the damage report is updated with text.

RETURN VALUE
The empty string.

DIAGNOSTICS
Error messages are output to the error log.

damageSetComment2

NAME:
damageSetComment2 Update the damage report with a comment

SYNOPSIS
damageSetComment2(text)

PARAMETERS
text A text.

PREREQUISITE
The current damage report is set

DESCRIPTION
The comment2 field in the damage report is updated with text.

RETURN VALUE
The empty string.

DIAGNOSTICS
Error messages are output to the error log.

damageSetType

Update the damage report with the number of affected items

SYNOPSIS
damageSetType(item, number, accessible)

PARAMETERS

item	The type of item damaged.
number	Number of item affected.
accessible	Indicate whether the damage is accessible.

PREREQUISITE
The current damage report is set

DESCRIPTION
The field containing the number of affected items in the damage report is updated with number and the corresponding accessibility field is updated with accessible

RETURN VALUE
The empty string.

DIAGNOSTICS
Error messages are output to the error log.

saveDamageDetails

Save the damage report

SYNOPSIS
saveDamageDetails()

PARAMETERS
None.

PREREQUISITE
The current damage report is set

DESCRIPTION
Save the current damage report.

RETURN VALUE
The empty string.

DIAGNOSTICS
Error messages are output to the error log.

Logging

logLocalError

Log an error message to the local log file

SYNOPSIS

logLocalError(text [, text] …)

PARAMETERS

text	Text to include in the error message. Any number of parameters can be supplied.

PREREQUISITE

None

DESCRIPTION

Concatenate all the parameters (no spaces are inserted between the parameters).

Invoke the logError API.

RETURN VALUE

The empty string.

DIAGNOSTICS

None.

EXAMPLE:

```
logLocalError("This is an ", @example,  " of an ",  &error,  " message");
```

logFatalError

Log a fatal error message to the local log file and exit

SYNOPSIS

logFatalError(text [, text] …)

PARAMETERS

text	Text to include in the error message. Any number of parameters can be supplied.

PREREQUISITE

None

DESCRIPTION

Concatenate all the parameters (no spaces are inserted between the parameters).

Invoke the logFatal API.

RETURN VALUE

The empty string.

DIAGNOSTICS

None.

EXAMPLE:

```
logFatalError("This is an ", @example,  " of a fatal ",  &error,  " message");
```

logDebug

Log a debug message

SYNOPSIS
logDebug(level, text)

PARAMETERS

level	The minimum debug level at which to log the message. Zero means always. The debug level of the adapter can be changed by sending it a debug high level message.
text	Text to include in the debug message. Any number of parameters can be supplied

PREREQUISITE
None

DESCRIPTION
Invoke the debug API.

RETURN VALUE
The empty string.

DIAGNOSTICS
None.

EXAMPLE
```
logDebug(0, "This is an ", @example,  " of a ",  &debug,  " message");
```

Event Manipulation

These functions read and modify events.

readIncidents

NAME:

readIncidents	Populate the Incident Object for the current event

SYNOPSIS
readIncidents()

PARAMETERS
None.

PREREQUISITE
The current event is set.

DESCRIPTION
If the Incident Object for the current event has not been populated previously, and the current event has at least one incident associated with it, invoke the JMS::getCalls API for the current event.

RETURN VALUE
The number of incidents in the Incident Object, when successful.

The empty string, when unsuccessful.

API call fails.

DIAGNOSTICS
Error messages are output to the error log.

clearIncidents

Clear the Incident Object, freeing the memory it uses

SYNOPSIS
clearIncidents()

PARAMETERS
None.

PREREQUISITE
The current event is set.

DESCRIPTION
If the Incident Object for the current event has been populated previously, clear it.

RETURN VALUE
The empty string.

DIAGNOSTICS
None.

setCaseNoteInfo

Set the case notes for the current order

SYNOPSIS
setCaseNoteInfo(note)

PARAMETERS
note Text to be entered in the Case Notes.

PREREQUISITE
The current order is set.

DESCRIPTION
Invoke the JMS::setCaseNoteInfo API for all the events associated with the order.

RETURN VALUE
True, when successful.

False, when unsuccessful. API call fails.

DIAGNOSTICS
Error messages are output to the error log.

setOperatorComment

Set the operator comment for the current order

SYNOPSIS
setOperatorComment(comment, append)

PARAMETERS
comment Comment text.

append

- **0** - replace current comment
- **1** - append to the current comment

PREREQUISITE
The current order is set.

DESCRIPTION
Invokes the JMS::setOperatorComment API for all the events associated with the order.

RETURN VALUE
True, when successful.

False, when unsuccessful.

API call fails.

DIAGNOSTICS
Error messages are output to the error log.

getCaseNotesForEvent

Get the case notes for an event

SYNOPSIS
getCaseNotesForEvent(event)

PARAMETERS

event	An event handle.

PREREQUISITE
None.

DESCRIPTION
Invoke the JMS::getCaseNotesForEvent API.

RETURN VALUE
The case notes for the event when successful.

The empty string when unsuccessful.

DIAGNOSTICS
Error messages are output to the error log.

setEventInfo

setEventInfo Set event information for an order.

SYNOPSIS
setEventInfo(outagefield1, value1, [outagefield2, value2], ...)

PARAMETERS

outagefield1	The outage field to update/set.
value1	The value to set.
outagefield2	The outage field to update/set.
value2	The value to set.

PREREQUISITE
The database table 'OUTAGE_FIELD' must be defined and populated. It contains the valid outage fields that can be used in outagefield.

DESCRIPTION
Update outagefield[1,2…] with value[1,2…] for event. Multiple outagefields and values updates are supported. The JMS::setEventInfo(..) API is invoked for all events associated with the order.

RETURN VALUE
True, when successful.

False when unsuccessful.

DIAGNOSTICS
Error messages are output to the error log.

setEventInfoAPI

setEventInfoAPI Set event information for arbitrary event.

SYNOPSIS
setEventInfoAPI(event, outagefield, value, user)

PARAMETERS

event	An event handle.
outagefield	The outage field to update/set.
value	The value to set.
user	The username.

PREREQUISITE
The database table 'OUTAGE_FIELD' must be defined and populated. It contains the valid outage fields that can be used in outagefield.

DESCRIPTION
Update outagefield with value for the event. The JMS::setEventInfo(..) API is invoked for the event with the specified event handle.

RETURN VALUE
True, when successful.

False when unsuccessful.

DIAGNOSTICS
Error messages are output to the error log.

completeEvent

NAME:

completeEvent	Complete all events associated with the current order

SYNOPSIS
completeEvent()

PARAMETERS
None.

PREREQUISITE
The current order is set.

DESCRIPTION
Restore and complete the event(s) associated with the current order.

Because the state of the event changes when the API's used by this function are called, the Event Object is automatically reloaded after the call. This means that the Incident Object will not be populated. If the Incident Object is required, it must be populated using readIncident().

RETURN VALUE
True, when successful.

False, when unsuccessful.

Could not restore event.

DIAGNOSTICS
Error messages are output to the error log.

closeOutEvent

NAME:
closeOutEvent Close out all events associated with the current order using specified applied rule

SYNOPSIS
closeOutEvent(user, reason, appliedRule, restoreTime)

PARAMETERS

user	username
reason	reason for closing the event
appliedRule	applied rule value to use
restoreTime	event restoration time

PREREQUISITE
The current order is set.

DESCRIPTION
Close out the event(s) associated with the current order using specified applied rule value.

If applied rule value is 26 (OUTAGE_PND_COMPLETE) and configuration parameter $G.config_AllowCloseOutEventCancel is set 'Y' then the event(s) will be canceled.

Because the state of the event changes when the API's used by this function are called, the Event Object is automatically reloaded after the call. This means that the Incident Object will not be populated. If the Incident Object is required, it must be populated using readIncident().

RETURN VALUE
True, when successful.

False, when unsuccessful. Could not close event.

DIAGNOSTICS
Error messages are output to the error log.

setGenericField

NAME:
setGenericField Update event information for the current order

SYNOPSIS
setGenericField(field, value, user)

PARAMETERS

field	A field to update.
value	A value.
user	Who initiated the update.

PREREQUISITE
The current order is set.

DESCRIPTION
For all events associated with the current order, update field with value, indicating that user initiated the update.

The JMS API 'setGenericField()' is invoked.

RETURN VALUE
True, when successful.

False, when the API call fails.

DIAGNOSTICS
Error messages are output to the error log.

readGenericField

NAME:
readGenericFieldRead information for the current event

SYNOPSIS
readGenericField(field)

PARAMETERS

field	A field to read.

PREREQUISITE
The current event is set. The value of field is a valid generic field name.

DESCRIPTION
Read the value of field for the current event.

The JMS API 'getGenericField()' is invoked.

RETURN VALUE
The value of field.

DIAGNOSTICS
Error messages are output to the error log.

ert

NAME:

ert	Set the estimated restoration time for the current order

SYNOPSIS
ert(time, ert_source, crew_name)

PARAMETERS

time	The estimated restoration time in internal format.
est_source	The source code for the estimated restoration time. Allowed values: **C**, U, 'a' through 'z' with the exception of 'm.' This parameter is optional. If not provided value 'C' is used.
crew_name	The name of the crew which is updating the estimated restoration time. This parameter is optional. If not provided the value specified in the "$G.config_Username" configuration parameter is used.

PREREQUISITE
The current order is set.

DESCRIPTION
Call the JMS:: setEstRestTime() API for all events associated with the current order.

RETURN VALUE
True, when successful.

False, when the API call fails.

DIAGNOSTICS
Error messages are output to the error log.

requestRowAction

NAME:
requestRowAction Press a button for the current event

SYNOPSIS
requestRowAction(table, button)

PARAMETERS

table	The name of the table (work_agenda is most common).
button	The name of the button to press.

PREREQUISITE
The current event is set.

DESCRIPTION
Call the JMS::requestRowAction API for the current event.

RETURN VALUE
True, when the API call succeeds.

False, when the API call fails.

DIAGNOSTICS
Error messages are output to the error log.

requestRowActionAll

NAME:
requestRowActionAll Press a button for the current order

SYNOPSIS
requestRowActionAll(table, button)

PARAMETERS

table	The name of the table (work_agenda is most common).
button	The name of the button to press.

PREREQUISITE
The current order is set.

DESCRIPTION
Call the JMS::requestRowAction API for all events associated with the current order.

RETURN VALUE
True, when the API call succeeds.

False, when the API call fails.

DIAGNOSTICS
Error messages are output to the error log.

eventIsActive

NAME:
eventIsActive Check that the current order has at least one active event

SYNOPSIS
eventIsActive()

PARAMETERS
None.

PREREQUISITE
The current order is set.

DESCRIPTION
Determine if the order has at least one active event.

RETURN VALUE
True, when active.

False, otherwise.

DIAGNOSTICS
Error messages are output to the error log.

confirmDeviceOutage

NAME:
confirmDeviceOutage Confirm a device outage for all events associated with the current order.

SYNOPSIS
confirmDeviceOutage(phases)

PARAMETERS
phases The phases that are out

PREREQUISITE
The current order is set.

DESCRIPTION
For all events associated with the current order, confirm that it is a real device outage by opening the phases on the device, using the DDS::operateState() API.

Because the state of the event changes when these API's are called, the Event Object is automatically reloaded after the call. This means that the Incident Object will not be populated. If the Incident Object is required, it must be populated using readIncident().

RETURN VALUE
True, when confirmation is successful.

False, if an API call fails. This will occur if the device has tags which prevent opening the device.

DIAGNOSTICS
Error messages are output to the error log.

confirmServiceOutage

NAME:
confirmServiceOutage Confirm a service outage for all events associated with the current order.

SYNOPSIS
confirmServiceOutage()

PARAMETERS
None.

PREREQUISITE
The current order is set.

DESCRIPTION
For all events associated with the current order, confirm that the customers described in the incidents read for the event, are individually out using the JMS::processIndivServUpdate() API. Note that no outages are created for customers who are not attached to the device (for example a fuzzy call).

Because the state of the event changes when this API is called, the Event Object is automatically reloaded after the call. This means that the Incident Object will not be populated. If the Incident Object is required, it must be populated using readIncident().

Because this function can create events, lockForEventCreation() should be called if the new events should not have orders created for them. If a pseudo relationship is to be created from the resulting events, it is recommended that createPseudoRelationFromConfirmServiceOutage() as it does not require the use of lockForEventCreation().

SEE ALSO:
createPseudoRelationFromConfirmServiceOutage(), section createPseudoRelationFromConfirmServiceOutage on page 5-110, and lockForEventCreation() section lockForEventCreation on page 5-105.

RETURN VALUE
The number of customers confirmed, when confirmation is successful.

False, otherwise.

DIAGNOSTICS
Error messages are output to the error log.

lockForEventCreation

NAME:
lockForEventCreation Prevent the processing of new events until the current document is fully processed.

SYNOPSIS
lockForEventCreation()

PARAMETERS
None.

PREREQUISITE
None.

DESCRIPTION
Prevent new events from being processed until the current document finishes processing. This is required if a call can cause events, e.g., confirmServiceOutage(), and the new events need to be processed, *e.g.*, by createPseudoRelation(). If possible avoid using this function, because it prevents other threads from processing any changes to events.

SEE ALSO:
confirmServiceOutage(), section confirmServiceOutage on page 5-105, and createPseudoRelation(), section createPseudoRelation on page 5-109.

RETURN VALUE
The empty string.

False, otherwise.

DIAGNOSTICS
None.

restoreOutage

NAME:
restoreOutage Restore all events for the current order

SYNOPSIS
restoreOutage()

PARAMETERS
None.

PREREQUISITE
The current order is set.

DESCRIPTION
For all events associated with the current order restore the event. If the event is a device outage restore it by closing all of the device's phases using the DDS::operateState() API. If the event is a service outage, restore it using the JMS::processIndivServUpdate() API.

Because the state of the event changes when these API's are called, the Event Object is automatically reloaded after the call. This means that the Incident Object will not be populated. If the Incident Object is required, it must be populated using readIncident().

RETURN VALUE
True, when restoration is successful.

False, if an API fails. This will occur in a device outage if the device has tags which prevent closing the device. This may occur in a service outage if the event has not been acknowledged.

DIAGNOSTICS
Error messages are output to the error log.

setRestoredTime

NAME:
setRestoredTime Updates restoration time for the current order

SYNOPSIS
setRestoredTime(restoreTime)

PARAMETERS
restoreTime Event restoration time.

PREREQUISITE
The current order is set.

DESCRIPTION
Updates restoration time for all event associated with the current order. The events must already be restored.

RETURN VALUE
The empty string.

DIAGNOSTICS
Error messages are output to the error log.

picklistCompLog

NAME:
picklistCompLog Update the database table picklist_completion_log for all the events associated with the current order.

SYNOPSIS
picklistCompLog(who, reason)

PARAMETERS

who	Who performed the action.
reason	What occurred

PREREQUISITE
Current order is set.

DESCRIPTION
For all events associated with the current order, create an entry in the database table 'picklist_completion_log' containing who and reason.

RETURN VALUE
True, when successful.

False, otherwise.

DIAGNOSTICS
Error messages are output to the error log.

picklistInfoUpdTr

NAME:
picklistInfoUpdTr Update the database table picklist_info_upd_tr for the current order.

SYNOPSIS
picklistInfoUpdTr(field1, value1, [field2, value2], ..)

PARAMETERS

field[1,2,..]	Fields to update
value[1,2,..]	Assignment Values

PREREQUISITE
Current order is set.

DESCRIPTION
For all events associated with the current order, update the fields with values in the database table 'picklist_info_upd_tr'.

RETURN VALUE
Empty string.

DIAGNOSTICS
Error messages are output to the error log.

picklistInfoEqFail

NAME:
picklistInfoEqFail Update the database table picklist_info_eq_fail for the current order.

SYNOPSIS
picklistInfoEqFail(field1, value1, [field2, value2], ..)

PARAMETERS

field[1,2,..]	Fields to update.
value[1,2,..]	Assignment values.

PREREQUISITE
Current order is set.

DESCRIPTION
For all events associated with the current order, update the fields with values in the database table

'picklist_info_eq_fail'.

RETURN VALUE
Empty string.

DIAGNOSTICS
Error messages are output to the error log.

updateOutageTimes

NAME:
updateOutageTimes Update restoration time for the events associated with the current order.

SYNOPSIS
updateOutageTimes(restoreTime)

PARAMETERS

restoreTime	Restoration time.

PREREQUISITE
Current order is set.

DESCRIPTION
For all events associated with the current order, update the outage restoration time. The events must already be restored.

RETURN VALUE
The return value of the JMS::updateOutageTimes API.

DIAGNOSTICS
Error messages are output to the error log.

Relation Functions

These functions manipulate dml and aggregate relationships.

Where these functions take a type parameter, it must be one of: NESTED_OUTAGE, MOMENTARY_OUTAGE, PARTIAL_RESTORATION, and RELATED_OUTAGE. (PSEUDO_NESTED_OUTAGE, MOMENTARY_OUTAGE, PARTIAL_RESTORATION, and RELATED_OUTAGE are valid, but have the same effect as their non-pseudo counterparts).

findRelation

NAME:
findRelation Find a dml relation by matching the contents of an relation object field. If found, set the current relation object to the relation found.

SYNOPSIS
findRelation(type, fieldname, value)

PARAMETERS

type	A relationship type.
fieldname	A field name
value	A value

PREREQUISITE
The type parameter is valid.

If the current order is set, the current order must be in the relation. (This can be guaranteed by not calling findOrder, or by finding the relation by order's key event using findRelation(event, $O.event).)

DESCRIPTION
Find the relation with a type of type whose fieldname has a value of value.

RETURN VALUE
True, when successful.

False, otherwise.

DIAGNOSTICS
Error messages are output to the error log.

createPseudoRelation

NAME:
createPseudoRelation Create a pseudo (non-Oracle Utilities Network Management System) relationship.

SYNOPSIS
createPseudoRelation(type)

PARAMETERS

type	A relationship type.

PREREQUISITE
The current order is set

The type parameter is valid.

The relationship type must have been configured for aggregate processing (this may be changed in a future release).

DESCRIPTION
Create a pseudo relationship of type among all outage events whose device is that of the current order's active event.

RETURN VALUE
True, when successful.

False, when unsuccessful.

No events exist on device.

The order's event is already in another relation.

All the other events on the device are in another relation.

DIAGNOSTICS
Error messages are output to the error log.

createPseudoRelationFromConfirmServiceOutage

NAME:
createPseudoRelationFromConfirmServiceOutage Create a pseudo (non-Oracle Utilities Network Management System) relationship from the results of the confirmation of a service outage.

SYNOPSIS
createPseudoRelationFromConfirmServiceOutage(type)

PARAMETERS

type	A relationship type.

PREREQUISITE
See confirmServiceOutage, section confirmServiceOutage on page 5-105 and createPseudoRelation, section createPseudoRelation on page 5-109.

DESCRIPTION
Confirm a service outage as described in confirmServiceOutage, section confirmServiceOutage on page 5-105.

Create a pseudo relationship of type as described in createPseudoRelation, section createPseudoRelation on page 5-109.

This combined function is recommended rather than calling confirmServiceOutage and then calling createPseudoRelation because:

There is no need to call lockForEventCreation()

If this call is in progress when the adapter exits, it will be completed fully when the adapter restarts.

RETURN VALUE
The number of customers confirmed, when successful.

False, when unsuccessful.

No events exist on device.

The order's event is already in another relation.

All the other events on the device are in another relation.

DIAGNOSTICS
Error messages are output to the error log.

triggerRelationChanged

NAME:
triggerRelationChanged Trigger all output documents with a RelationChanged trigger.

SYNOPSIS
triggerRelationChanged(relation)

PARAMETERS
relation The relation's handle. (If the relation has been found, $R.relation gives this value).

PREREQUISITE
There is at least one output document with a RelationChanged trigger.

DESCRIPTION
For all events in the relation, trigger all output documents with a RelationChanged trigger, with the event's handle as the trigger argument.

RETURN VALUE
The empty string.

DIAGNOSTICS
Error messages are output to the error log.

deleteRelation

NAME:
deleteRelation Delete the current relation.

SYNOPSIS
deleteRelation()

PARAMETERS
None.

PREREQUISITE
The current relation is set.

DESCRIPTION
Delete the current relation. After the deletion, there is no current relation.

RETURN VALUE
The empty string.

DIAGNOSTICS
Error messages are output to the error log.

Miscellaneous API Functions

classTable

NAME:
classTable Return the class table for a class.

SYNOPSIS
classTable(class)

PARAMETERS
class The class number

PREREQUISITE
The class parameter must be an integer.

DESCRIPTION
Call the ODS::getTable() API. If the table does not exist an empty string is returned.

RETURN VALUE
The table name, when successful.

The empty string when unsuccessful.

DIAGNOSTICS
Error messages are output to the error log.

getClassDesc

NAME:
getClassDesc Returns a textual description of the Class.

SYNOPSIS
getClasDesc(class)

PARAMETERS
class The class number

PREREQUISITE
The class parameter must be an integer.

DESCRIPTION
Call the ODS::getClassDesc() API. If the class does not exist an empty string is returned.

RETURN VALUE
The textual description, when successful.

The empty string when unsuccessful.

DIAGNOSTICS
Error messages are output to the error log.

getCustomersForTransformer

NAME:
getCustomersForTransformer Returns list of customer information records for a transformer.

SYNOPSIS
getCustomersForTransformer(xfm)

PARAMETERS
xfm Transformer device alias.

PREREQUISITE
None

DESCRIPTION
Reads ADDRESS, METER_ID, and DEVICE_ID columns from the CES_CUSTOMERS table for the specified transformer.

RETURN VALUE
A string that contains newline-separated list of customer information records for the specified transformer. Each record contains space-separated address, meter id, and device alias values.

DIAGNOSTICS
Error messages are output to the error log.

getTransformerForCustomer

NAME:
getTransformerForCustomer Returns list of customer information records for a customer address.

SYNOPSIS
getTransformerForCustomer(addr)

PARAMETERS
addr Customer address.

PREREQUISITE
None

DESCRIPTION
Reads ADDRESS, METER_ID, and DEVICE_ID columns from the CES_CUSTOMERS table for the specified customer address.

RETURN VALUE
A string that contains newline-separated list of customer information records for the specified customer address. Each record contains space-separated address, meter id, and device alias values.

DIAGNOSTICS
Error messages are output to the error log.

isCls

NAME:
isCls Check if a class is one of classes in a list.

SYNOPSIS
isCls(class, className1, className2, …)

PARAMETERS
class A class number.

className1, className2, …A list of class names.

PREREQUISITE
None

DESCRIPTION
Read and cache the class numbers for all the className parameters, using the ODS::getClassIndex API.

If class is one of the class numbers, return true, false otherwise.

RETURN VALUE
True, when class is in the list.

False, when class is not in the list.

DIAGNOSTICS
Error messages are output to the error log.

setAlarm

NAME:
setAlarm Send an alarm to the WorkAgenda

SYNOPSIS
setAlarm(deviceHandle, alarmMsg)

PARAMETERS
deviceHandle A device handle.

alarmMsg A alarm message.

PREREQUISITE
None

DESCRIPTION
Send an alarmMsg regarding deviceHandle, using the DDS::sendAlarm API.

RETURN VALUE
None.

DIAGNOSTICS
Error messages are output to the error log.

getGuid

NAME:
getGuid Return a globally unique id.

SYNOPSIS
getGuid()

PARAMETERS
None

PREREQUISITE
None

DESCRIPTION
Invokes GatewayUtil::CreateGuid() API.

RETURN VALUE
The GUID, when successful.

The empty string when unsuccessful.

DIAGNOSTICS
Error messages are output to the error log.

interfaceUp

NAME:
interfaceUp Register the state of the interface

SYNOPSIS
interfaceUp()

PARAMETERS
None.

PREREQUISITE
None

DESCRIPTION
Register that the interface is currently up. Invoke SMS::registerCallback(), and SMS::registerInterfaceFailed() API.

RETURN VALUE
The empty string.

DIAGNOSTICS
None.

interfaceDown

NAME:
interfaceDown Register the state of the interface

SYNOPSIS
interfaceDown()

PARAMETERS
None.

PREREQUISITE
None

DESCRIPTION
Register that the interface is currently down. Invoke SMS::registerCallback(), and SMS::registerInterfaceFailed() API.

RETURN VALUE
The empty string.

DIAGNOSTICS
None.

interfaceUpMessage

NAME:
interfaceUpMessage Register the state of the interface

SYNOPSIS
interfaceUpMessage(message)

PARAMETERS
message message to appear in the System Alarms list

PREREQUISITE
None

DESCRIPTION
Register that the interface is currently up. Provided message with appear in the System Alarms list.

RETURN VALUE
The empty string.

DIAGNOSTICS
None.

interfaceDownMessage

NAME:
interfaceDownMessageRegister the state of the interface

SYNOPSIS
interfaceDownMessage(message)

PARAMETERS
message message to appear in the System Alarms list

PREREQUISITE
None

DESCRIPTION
Register that the interface is currently down. Provided message with appear in the System Alarms list.

RETURN VALUE
The empty string.

DIAGNOSTICS
None.

sql

NAME:
sql Execute a non-select SQL statement

SYNOPSIS
sql(sqlStatement)

PARAMETERS
sqlStatement A non-select SQL statement.

PREREQUISITE
None

DESCRIPTION
Execute sqlStatement using the DBS::sql() API.

RETURN VALUE
True, when successful.

False, when unsuccessful.

DIAGNOSTICS
Error messages are output to the error log.

EXAMPLE:
```
sql("delete from damage_report where event_cls=" + $E.outageHdl.cls +
      " and event_idx=" + $E.outageHdl.idx);
```

query

NAME:
query Execute SQL query

SYNOPSIS
query(sqlStatement)

PARAMETERS
sqlStatement A select SQL statement.

PREREQUISITE
None

DESCRIPTION
Execute sqlStatement using the DBS::query() API and return first column of the first returned row.

RETURN VALUE
Value of the first column of the first returned row.

DIAGNOSTICS
Error messages are output to the error log.

EXAMPLE:
```
query("SELECT SYSDATE FROM dual");
```

Non API Functions

This set of functions does not use the Oracle Utilities Network Management System API.

isSet

NAME:
isSet Check if a parameter has been set.

SYNOPSIS
isSet(param)

PARAMETERS
param The parameter to check.

PREREQUISITE
None

DESCRIPTION
Check if the param has been set.

RETURN VALUE
True, if param has been set.

False, if not.

DIAGNOSTICS
None.

length

NAME:
length Return the number of characters in a string.

SYNOPSIS
length(string)

PARAMETERS

string	A string value

PREREQUISITE
None

DESCRIPTION
Determine the length of string.

RETURN VALUE
The length of string.

DIAGNOSTICS
None.

substring

NAME:

substring	Return a sub-string of a value

SYNOPSIS
substring(string, start, length)

PARAMETERS

string	A string value
start	The starting position of the subset in string
length	The length of the sub-string to return

PREREQUISITE
None

DESCRIPTION
Return a subset of string whose size equals length, and starts at position start in string.

If length is less than 1, return the empty string.

If start is zero or positive, it is an offset from the start of string.

If start is negative, it is an offset from the end of string.

If there are less than length characters in string starting at start, return all the characters in string starting at start.

Otherwise return length characters from string starting at start.

RETURN VALUE
The sub-string

DIAGNOSTICS
None.

stringbefore

NAME:

stringbefore	Return a sub-string of a string value

SYNOPSIS
stringbefore(string, stop)

PARAMETERS

string	A string value

stop	A string to stop at.

PREREQUISITE
None

DESCRIPTION
Search string for stop and return all characters before stop. If stop does not exist within string return string

RETURN VALUE
The sub-string.

DIAGNOSTICS
None.

stringafter

NAME:

stringafter	Return a sub-string of a string value

SYNOPSIS
stringafter(string, start)

PARAMETERS

string	A string value
start	Characters to start after.

PRE-REQUISITE:
None

DESCRIPTION
Search string for any character in start and return all characters after that point. If start does not exist within string return string.

RETURN VALUE
The sub-string.

DIAGNOSTICS
None.

isDigits

NAME:

isDigits	Check if the string is made up of digits only

SYNOPSIS
isDigits(string)

PARAMETERS

string	A string value

PREREQUISITE
None

DESCRIPTION
Check if string is made up of purely numeric values (*e.g.*, 0 to 9)

RETURN VALUE
True, if string is all digits.

False, otherwise.

DIAGNOSTICS
Error messages are output to the error log.

readDigits

NAME:
readDigits Read the first continuous block of digits found in the input string.

SYNOPSIS
readDigits(string)

PARAMETERS
string A string value

PREREQUISITE
None

DESCRIPTION
Read the first continuous block of digits found in the input string.

RETURN VALUE
First continuous block of digits found in the input string. Empty string if none are found.

DIAGNOSTICS
None.

stringInString

NAME:
stringInString Check to see whether a sub-string exists in another string

SYNOPSIS
stringInString(string1, string2)

PARAMETERS
string1 A string value

string2 A string value

PREREQUISITE
None

DESCRIPTION
Search string2 for string1.

RETURN VALUE
True, if string1 is found

False, otherwise.

DIAGNOSTICS
None.

trim

NAME:
trim Removes leading and trailing whitespace characters

SYNOPSIS
trim(string)

PARAMETERS

string	A string value

PREREQUISITE
None

DESCRIPTION
Removes leading and trailing whitespace characters from string.

RETURN VALUE
String with leading and trailing whitespace characters removed.

DIAGNOSTICS
None.

trimLeft

NAME:

trimLeft	Removes leading whitespace characters

SYNOPSIS
trimLeft(string)

PARAMETERS

string	A string value

PREREQUISITE
None

DESCRIPTION
Removes leading whitespace characters from string.

RETURN VALUE
String with leading whitespace characters removed.

DIAGNOSTICS
None.

trimRight

NAME:

trimRight	Removes trailing whitespace characters

SYNOPSIS
trimRight(string)

PARAMETERS

string	A string value

PREREQUISITE
None

DESCRIPTION
Removes trailing whitespace characters from string.

RETURN VALUE
String with trailing whitespace characters removed.

DIAGNOSTICS
None.

removeDelim

NAME:
removeDelim Return a substring without the contents contained within the delimiters, including the delimiters.

SYNOPSIS
removeDelim(string, start, end)

PARAMETERS

string	A string value
start	A starting delimiter
end	A end delimiter

PREREQUISITE
None

DESCRIPTION
Search string for start, remove all characters found between and including start and end. If start is not found return string. If end is not found, return all characters after and including start.

RETURN VALUE
The sub-string value.

DIAGNOSTICS
Error messages are output to the error log.

diffs

NAME:
diffs Returns string containing tokens present in string1 but not in string2.

SYNOPSIS
diffs(string1, string2, delim)

PARAMETERS
string1 A string of tokens

string2 A string of tokens

delim A delimiter

PREREQUISITE
None

DESCRIPTION
Splits both strings into lists of token using the delimiter. Build a new string containing only the token from string1 which are not present in string2.

RETURN VALUE
String containing tokens present in string1 but not in string2. Tokens are separated by the delimiter.

DIAGNOSTICS
None.

decodeDateTime

NAME:
decodeDateTime Translate a formatted time string into internal format.

SYNOPSIS
decodeDateTime(time)

PARAMETERS

time	A time in the format *yyyy-mm-dd*T*hh:mm:ss*

PREREQUISITE
None

DESCRIPTION
Return time in internal time format. If time is not in the correct format, return the empty string.

RETURN VALUE
The time in internal format, when successful.

False, when unsuccessful.

Format of time is invalid

DIAGNOSTICS
Error messages are output to the error log.

decodeDateShift

NAME:
decodeDateShift Translate a formatted time string into internal format and shift it back by the specified number of hours.

SYNOPSIS
decodeDateShift(time, shift)

PARAMETERS

time	A time in the format *yyyy-mm-dd*T*hh:mm:ss*
shift	A number of hours by which to shift the input time backward.

PREREQUISITE
None

DESCRIPTION
Returns the input time shifted backward by the specified number of hours in internal time format. If time is not in the correct format, return the empty string.

RETURN VALUE
The time in internal format, when successful.

False, when unsuccessful.

DIAGNOSTICS
Error messages are output to the error log.

formatDateTime

NAME:
formatDateTime Translate a time in internal format into a formatted time string.

SYNOPSIS
formatDateTime(time)

PARAMETERS
time A time in internal format.

PREREQUISITE
None

DESCRIPTION
Format time to *yyyy-mm-dd*T*hh*:*mm*:ss. If time is not in internal format, return the empty string.

RETURN VALUE
The formatted time, when successful.

False., when unsuccessful

Invalid time supplied.

DIAGNOSTICS
Error messages are output to the error log.

formatDateShift

NAME:
formatDateShift Translate a time in internal format into a formatted time string and shift it forward by specified number of hours.

SYNOPSIS
formatDateShift(time, shift)

PARAMETERS

time A time in internal format.

shift A number of hours by which to shift the input time forward.

PREREQUISITE
None

DESCRIPTION
Shift time forward by the specified number of hours and format it as *yyyy-mm-dd*T*hh*:*mm*:ss. If time is not in internal format, return the empty string.

RETURN VALUE
The formatted time, when successful.

False., when unsuccessful

DIAGNOSTICS
Error messages are output to the error log.

reformatDateTime

NAME:
reformatDateTimeTranslate year, month, day, and time into a formatted time string.

SYNOPSIS
reformatDateTime(year, month, day, time)

PARAMETERS

year	Year in ***yyyy*** format.
month	Month in ***mm*** format.
day	Day in ***dd*** format.
time	Time in ***hh:mm*** format

PREREQUISITE
None

DESCRIPTION
Format time to ***yyyy-mm-dd***T***hh:mm***:00.

RETURN VALUE
The formatted time.

DIAGNOSTICS
None.

formatDTNow

NAME:

formatDTNow	Format the current system time

SYNOPSIS
formatDTNow()

PARAMETERS
None.

PREREQUISITE
None

DESCRIPTION
Return the results of formatDateTime(time()).

RETURN VALUE
The formatted time.

DIAGNOSTICS
None.

time

NAME:

time	Return the current system time

SYNOPSIS
time()

PARAMETERS
None

PREREQUISITE
None

DESCRIPTION
Return the current system time

RETURN VALUE
The current time, in internal format.

DIAGNOSTICS
None.

addMinutesToTime

NAME:
addMinutesToTimeReturn the current system time with specified number of minutes added to it

SYNOPSIS
addMinutesToTime(minutes)

PARAMETERS
minutes The number of minutes to add to the current time. This parameter can be negative.

PREREQUISITE
None

DESCRIPTION
Returns the current system time with specified number of minutes added to it.

RETURN VALUE
The resulted time, in internal format.

DIAGNOSTICS
None.

pause

NAME:
pause Pause evaluation for a period of time

SYNOPSIS
pause(seconds)

PARAMETERS
seconds The number of seconds to pause

PREREQUISITE
None

DESCRIPTION
Pause for seconds.

RETURN VALUE
The empty string.

DIAGNOSTICS
None.

dmlWait

NAME:
dmlWait Pause evaluation for a period of time

SYNOPSIS
dmlWait(seconds)

PARAMETERS
seconds The number of seconds to pause

PREREQUISITE
None

DESCRIPTION
Execute Isis-aware pause for the specified number of seconds.

RETURN VALUE
The empty string.

DIAGNOSTICS
None.

isIn

NAME:
isIn Check if a value exists in a list

SYNOPSIS
isIn(value, item1, item2, item3, …)

PARAMETERS
value A value

item1, item2, item3, …A list of values.

PREREQUISITE
None

DESCRIPTION
Check item1, item2, item3, … for value.

RETURN VALUE
True, when value is found.

False, when not found.

DIAGNOSTICS
None.

selectValue

NAME:
selectValue Select a value based on a input string.

SYNOPSIS
selectValue(string, default, match1, value1, [match2, value2], [match3, value3], …)

PARAMETERS
string A value to match

default A default value

match[123] A list of values to compare to

value[123] The values to return if a match is found

PREREQUISITES:
None

DESCRIPTION
Search match for string and return the corresponding value. If string is not found return default.

RETURN VALUE
The empty string.

DIAGNOSTICS
Error messages are output to the error log.

NOTES:
For large lists, the use of a code mapping table would be more appropriate.

EXAMPLE:
```
@exp = selectValue(3, None, 1, "hello", 2, "goodbye", 3, "later")
```

Therefore, string = 3,default = None,match = 1, 2, 3 value = hello, goodbye, later

In this example, @exp = later.

triggerOutputDoc

NAME:
triggerOutputDoc Trigger an output document

SYNOPSIS
triggerOutputDoc(doc, trig, [argument1, argument2, …])

PARAMETERS

doc	An output document
trig	The name of the trigger to fire.
argument	Argument required to triggered the output document.

PREREQUISITE
A document named doc must exist.

There must be an OnRequest trigger named trig in doc.

The number of arguments must match the number of arguments expected by trig.DESCRIPTION

Validate doc and argument. Queue doc for processing.

RETURN VALUE
The empty string.

DIAGNOSTICS
Error messages are output to the error log.

sortIncidents

NAME:
sortIncidents Sort the incidents in the current event

SYNOPSIS
sortIncidents(field1, sort order1, [field2, sort order2, …])

PARAMETERS

field	An incident object field
sort order	The order to sort in, 'asc' meaning ascending or 'desc' meaning descending (this parameter is not case sensitive).

PREREQUISITE
The current event is set.

The fields parameters must be valid incident fields See Incident Object Fields on page 5-147, below for the available incident fields.

The order parameters must be valid. If the last order parameter is omitted it defaults to 'asc'

DESCRIPTION
Sort the incidents in the current event. When two incidents are compared, the specified fields are compared in the order they appear in the parameter list. If they differ, the incident with the lower value comes first in the list if it has an ascending order, otherwise the incident with the higher value comes first. If the two fields are equal, the sort order depends on the next field in the parameter list. If all fields are equal, the order of the two incidents is undetermined. To force a consistent order, it is recommended that the last field be the 'getCondHdl' field which always differ (the newer incident having the larger value).

All comparisons are based on the internal types of the fields, in order to give the expected results. Character data is sorted in lexical order, the case being significant.

RETURN VALUE
The empty string.

DIAGNOSTICS
Error messages are output to the error log.

highPriTCCategoriesFromClues

NAME:
highPriTCCategoriesFromClues Return the highest priority trouble code categories from all of the supplied clues.

SYNOPSIS
highPriTCCategoriesFromClues(clues)

PARAMETERS

clues	The clues to decode

PREREQUISITE
The MDS_HIGH_PRI_CAT table must exist in the database.

DESCRIPTION
If the MDS_HIGH_PRI_CAT table has not been read, read and cache its contents. This table supplies the priority order for each group in the trouble code.

Decode each clue into it's group and numeric value

Find the highest priority for each group in all the clues, and assemble these into a composite trouble code.

RETURN VALUE
The composite trouble code.

DIAGNOSTICS
Error messages are output to the error log.

highPriTCCategoriesFromIncidents

NAME:
highPriTCCategoriesFromIncidents Return the highest priority trouble code categories from all of the incidents for the current event.

SYNOPSIS
highPriTCCategoriesFromIncidents()

PARAMETERS
None.

PREREQUISITE
Current event is set.

The MDS_HIGH_PRI_CAT table must exist in the database.

DESCRIPTION
If the MDS_HIGH_PRI_CAT table has not been read, read and cache its contents. This table supplies the priority order for each group in the trouble code.

Find the highest priority for each group in all the incidents for the current event, and assemble these into a composite trouble code.

RETURN VALUE
The composite trouble code.

DIAGNOSTICS
Error messages are output to the error log.

loadTroubleCodes

NAME:
loadTroubleCodes Cache the trouble codes and their equivalent textual descriptions.

SYNOPSIS
loadTroubleCodes()

PARAMETERS
None.

PREREQUISITE
The table SRS_TROUBLE_CODES exists in the database.

DESCRIPTION
The trouble codes are cached in-groups using the 'group_order' column. For each group the 'code_num' column and the 'short_desc' column are cached. The 'code_num' is used as the trouble codes' reference code and the 'short_desc' is used as the trouble codes' textual description.

RETURN VALUE
The empty string.

DIAGNOSTICS
Error messages are output to the error log.

formatClues

NAME:
formatClues Convert a trouble code into a textual description

SYNOPSIS
formatClues(trCode)

PARAMETERS
trCode A trouble code

PREREQUISITE
The table SRS_TROUBLE_CODES exists in the database.

DESCRIPTION
If the SRS_TROUBLE_CODES table has not been read, read and cache its contents by calling loadTroubleCodes().

Convert each digit in trCode to its equivalent textual description. Concatenate the descriptions.

RETURN VALUE
The textual description.

DIAGNOSTICS
None.

phaseStr

NAME:
phaseStr Convert a set of phases in internal bitmap format to a textual representation.

SYNOPSIS
phaseStr(phases)

PARAMETERS
phases The phases in internal bitmap format.

PREREQUISITE
None

DESCRIPTION
Convert the phase bits into 'ABC' format. If the bit for a phase is not set, do not include its letter.

RETURN VALUE
The textual representation.

DIAGNOSTICS
None.

phaseInt

NAME:
phaseInt Convert a set of phases in a textual representation to an internal bitmap format.

SYNOPSIS
phaseInt(phases)

PARAMETERS

phases	A textual representation of the phases.

PREREQUISITE
None

DESCRIPTION
Convert the textual phase in 'ABC' format to its internal bitmap format.

RETURN VALUE
The internal bitmap format.

DIAGNOSTICS
None.

setTimeout

NAME:

setTimeout	Set a time out to call a function

SYNOPSIS
setTimeout(name, wait, function)

PARAMETERS

name	The name of the time out.
wait	The time to wait, in seconds.
function	The function to call at when the time expires.

PREREQUISITE
The wait parameter must be an integer greater than zero.

The function parameter must be a function call.

DESCRIPTION
If there is an un-expired timeout with the same name, do nothing.

Evaluate all the parameters of the function, if any.

Start a timeout with the specified name.

Call the function when the timeout expires (unless cancelled by cancelTimeout()).

RETURN VALUE
The empty string.

DIAGNOSTICS
None.

cancelTimeout

NAME:

cancelTimeout	Cancel a timeout.

SYNOPSIS
cancelTimeout(name)

PARAMETERS

name	The name of the timeout to cancel.

PREREQUISITE
None

DESCRIPTION
If there is a timeout with the specified name, cancel it, preventing the timeout's function from being called, otherwise, do nothing.

RETURN VALUE
The empty string.

DIAGNOSTICS
None.

createOrder

NAME:
createOrder Create an order.

SYNOPSIS
createOrder()

PARAMETERS
None.

PREREQUISITE
The current event is set(usually due to the arrival of an SRSoutput message).

The current event must not be associated with another order. This can be determined by a call to findOrder(event, $E.outageHdl).

If the current relation is set, the current event must be in the relation. (This can be guaranteed by not calling findRelation, or by finding the relation by relation's key event using findRelation(event, $E.outageHdl.)

DESCRIPTION
Create the order's row in the MDS_ORDER table, and associate the event with the order.

Populate internal data structures for the order.

Set the current order to the order created.

RETURN VALUE
True if successful.

False if unsuccessful (current event already associated with another order).

DIAGNOSTICS
Error messages are output to the error log.

findOrder

NAME:
findOrder Find an order by matching the contents of an order object field. If found, set the current order object to the order found.

SYNOPSIS
findOrder(field, value)

PARAMETERS
field An order object field name.

value The value to match

PREREQUISITE
The field parameter must be a valid order field name.

If the current relation is set, the order must be in the relation. (This can be guaranteed by not calling findRelation, or by finding the order from the relation's key event, using findOrder(event, $R.event).)

DESCRIPTION
Search for an order with a field whose value is value.

If found, set the current order object to the order that was found and return true.

If none is found, return false.

haveOrder

NAME:
haveOrder Determine if there is an order matching the contents of an order object field, without entering any mutexes.

SYNOPSIS
haveOrder(field, value)

PARAMETERS
field An order object field name.

value The value to match

PREREQUISITE
The field parameter must be a valid order field name.

DESCRIPTION
Search for an order with a field whose value is value.

RETURN VALUE
True, when successful.

False, when unsuccessful.

DIAGNOSTICS
Error messages are output to the error log.

completeOrder

NAME:
completeOrder Complete the current order, making it no longer active.

SYNOPSIS
completeOrder(text)

PARAMETERS

text A description of the why the order is complete. For example, the order could

have been cancelled or completed by the crew.

PREREQUISITE

The current order is set.

DESCRIPTION
Complete the order by setting its 'active' column to 'N', its 'when_completed' column to the current time, and setting its 'comp_reason' column to text in MDS_ORDER table. Clear all data structures relating to the order.

RETURN VALUE
The empty string.

DIAGNOSTICS
Error messages are output to the error log.

haveEventOrder

NAME:
haveEventOrder Determine whether these is an order for an event.

SYNOPSIS
haveEventOrder(event)

PARAMETERS
event The event's handle.

PREREQUISITE
None.

DESCRIPTION
Determine whether there is an order for the event handle is event.

RETURN VALUE
True, if the event has an order.

False, if the event does not have an order.

DIAGNOSTICS
None.

findEventObject

NAME:
findEventObject Find the External Event Object for an event.

SYNOPSIS
findEventObject(event)

PARAMETERS
event The event's handle.

PREREQUISITE
None.

DESCRIPTION
Find the event object whose handle is event. If successful, make it the current event.

RETURN VALUE
True, when successful.

False, when unsuccessful.

DIAGNOSTICS
Error messages are output to the error log.

setDocValue

NAME:
setDocValue Change the value of an element, attribute or variable in an active document

SYNOPSIS
setDocValue(object, doc, name, value)

PARAMETERS

object	The object identifier character for the object that holds the active document. Currently only 'O', the order object, is available.
doc	The name of the document
name	The alternate name of the entity whose value is to be set.
value	The value to set the entity to.

PREREQUISITE
object must be a valid object identifier, and it must be a current object (for example, use findOrder()).

doc must be a associated with the object.

name must be the alternate name of an entity in doc.

DESCRIPTION
Find the active document doc in the current object.

In the document set the entity named name to value.

RETURN VALUE
The empty string.

DIAGNOSTICS
Error messages are output to the error log.

printEvntCrew

NAME:
printEvntCrew Print the current assignments/dispatches of crews to orders to the log.

SYNOPSIS
printEvntCrew()

PARAMETERS
None.

PREREQUISITE
None.

DESCRIPTION
Print the crews assigned and dispatched to all orders to the log.

RETURN VALUE
The empty string.

DIAGNOSTICS
None.

removeOldACN

NAME:
removeOldACN Removed strings found in the AUTOMATED_CASENOTES table from the passed string.

SYNOPSIS
removeOldACN(note)

PARAMETERS
note A text string.

PREREQUISITE
AUTOMATED_CASENOTES table exists.

DESCRIPTION
Loads all values from the AUTOMATED_CASE_NOTES column in the AUTOMATED_CASENOTES database table. Checks if any of the loaded strings are present in the input string and removes found occurrences.

RETURN VALUE
Updated input string.

DIAGNOSTICS
Error messages are output to the error log.

xml

NAME:
xml Return the current input xml document, if any.

SYNOPSIS
xml()

PARAMETERS
None.

PREREQUISITE
None.

DESCRIPTION
Return the current input document, or the empty string, if none.

RETURN VALUE
The current input xml document, if any.

The empty string, when an input xml document in not being processed.

DIAGNOSTICS
None.

intendedForMobile

NAME:
intendedForMobile Checks if SRSoutput message is intended for mobile system.

SYNOPSIS
intendedForMobile(typeMask)

PARAMETERS
typeMask Value of the typeMask field from SRSoutput message.

PREREQUISITES:
None

DESCRIPTION
Checks if SRSO_SEND_TO_MOBILE bit is set in typeMask.

RETURN VALUE
"true" is the message is intended for mobile system, otherwise empty string.

DIAGNOSTICS
Error messages are output to the error log.

EXAMPLE:
intendedForMobile($E.typeMask);

getPhasesDesc

NAME:
getPhasesDesc Convert bitmask representing phases into string.

SYNOPSIS
getPhasesDesc(phases)

PARAMETERS
phases Phases bitmask.

PREREQUISITES:
None

DESCRIPTION
Converts phases bitmask into a string using letters A, B, C, and N to designate different phases and the neutral.

RETURN VALUE
String containing names of the phases present in the bitmask.

DIAGNOSTICS
None.

sqlQuoted

NAME:
sqlQuoted Converts string into SQL text literal.

SYNOPSIS
sqlQuoted(str)

PARAMETERS
str text string.

PREREQUISITES:
None

DESCRIPTION
Wraps string in single quotes and escapes single quotes in the string by replacing them with double single quotes.

RETURN VALUE
SQL text literal representation of the passed string.

DIAGNOSTICS
None.

readData

NAME:
readData Reads a data field from the specified object.

SYNOPSIS
readData(dataObject, fieldName, [subFieldName])

PARAMETERS
dataObject The type of object to read data from.

Valid values:

- E - event data
- O - order data
- R - relationship data
- I - incident (call) data
- G - globally available data
- T - trigger argument data

fieldName The name of the field to read.

subFieldName If the field stores NMS handle this parameter specifies which part of the handle to read.

Valid values:

- cls - class number
- idx - instance number
- app - app field

PREREQUISITES:
- If reading event or incident data, then current event needs to be set.
- If reading order data, then current order needs to be set.
- If reading relationship data, then current relation needs to be set.

DESCRIPTION
Reads a data field from the specified object.

RETURN VALUE
Field value.

DIAGNOSTICS
Error messages are output to the error log.

setData

NAME:
setData Sets a data field for the specified object.

SYNOPSIS
setData(dataObject, fieldName, fieldValue)

PARAMETERS
dataObject The type of object to read data from.

Valid values:

- O - order data
- R - relationship data
- G - globally available data
- T - trigger argument data

fieldName The name of the field to set.

fieldValue The value set the field to.

PREREQUISITES:

- If reading order data, then current order needs to be set.
- If reading relationship data, then current relation needs to be set.

DESCRIPTION
Sets a data field for the specified object.

RETURN VALUE
Empty string.

DIAGNOSTICS
Error messages are output to the error log.

readGlobalData

NAME:
readGlobalData Reads the specified globally available data field.

SYNOPSIS
readGlobalData(fieldName)

PARAMETERS
fieldName The name of the field to read.

PREREQUISITES:
None.

DESCRIPTION
Reads the specified globally available data field.

RETURN VALUE
Field value.

DIAGNOSTICS
None.

setGlobalData

NAME:
setGlobalData Sets the specified globally available data field.

SYNOPSIS
setGlobalData(fieldName, fieldValue)

PARAMETERS
fieldName The name of the field to set.

fieldValue The value set the field to.

PREREQUISITES:
None.

DESCRIPTION
Sets the specified globally available data field.

RETURN VALUE
Empty string.

DIAGNOSTICS
None.

eraseGlobalData

NAME:
eraseGlobalData Erases the specified globally available data field.

SYNOPSIS
eraseGlobalData(fieldName)

PARAMETERS
fieldName The name of the field to erase.

PREREQUISITES:
None.

DESCRIPTION
Erases the specified globally available data field.

RETURN VALUE
Empty string.

DIAGNOSTICS
None.

readOrderField

NAME:
readOrderField Finds an order and reads a field from it.

SYNOPSIS
readOrderField(lookupFieldName, lookupFieldValue, orderFieldName)

PARAMETERS
lookupFieldName The name of the lookup field.

lookupFieldValue The value of the lookup field to search for.

orderFieldName The name of the field to read.

PREREQUISITES:
None.

DESCRIPTION
Finds an order with the specified lookup field set to the desired value and reads the specified order field.

RETURN VALUE
Field value. Empty string if order was not found.

DIAGNOSTICS
None.

undefFunc

NAME:
undefFunc Used for debugging to allow undefined functions.

SYNOPSIS
undefFunc()

PARAMETERS
None.

PREREQUISITE
None

DESCRIPTION
Used for debugging to allow undefined functions.

RETURN VALUE
"Undefined function called" string.

DIAGNOSTICS
None.

Obsolete/Deprecated Functions

- **updateJobCompleteTime:** Updates column JOB_COMPLETE_TIME in the JOBS table directly bypassing JMService.
- **updateOverriddenCrewTime:** Updates CREW_DISPATCHES table directly bypassing JMService.
- **getAltDeviceLocation:** Reads generic event field by position. Use 'readGenericField' instead.

Event Object Fields

These are the fields available in the external event object 'E'. For each field the equivalent SRSoutput data field is listed.

Field Name	SRSoutput Data Fields
alarmHdl	SRSoutput::alarmHdl
devHdl	SRSoutput::devHdl
feederHdl	SRSoutput::feederHdl
outageHdl	SRSoutput::outageHdl
oldEvent	SRSoutput::oldEvent
condHdl	SRSoutput::condHdl
extraDevHdl	SRSoutput::extraDevHdl
devClsName	SRSoutput::devClsName

Field Name	SRSoutput Data Fields
incidentType	SRSoutput::incidentType
description	SRSoutput::description
cause	SRSoutput::cause
preferredAlias	SRSoutput::perferredAlias
troubleCode	SRSoutput::troubleCode
troubleQueue	SRSoutput::troubleQueue
office	SRSoutput::office
circuit	SRSoutput::circuit
district	SRSoutput::district
dispAddress	SRSoutput::dispAddress
addrBuilding	SRSoutput::addrBuilding
addrStreet	SRSoutput::addrStreet
addrCity	SRSoutput::addrCity
city	SRSoutput::city
status	SRSoutput::status
feeder	SRSoutput::feeder
tags	SRSoutput::tags
est_source	SRSoutput::est_source
comment	SRSoutput::comment
devCode	SRSoutput::devCode
externId	SRSoutput::externId
crewId	SRSoutput::crewId
supplyNodeDevice	SRSoutput::supplyNodeDevice
supplyNodeIndexes	SRSoutput::supplyNodeIndexes
leafNcgs	SRSoutput::leafNcgs
numLeafNcgs	SRSoutput::numLeafNcgs
actionIDs	SRSoutput::actionIDs
numActionsIDs	SRSoutput::numActionsIDs
outageTime	SRSoutput::outageTime
firstIncTime	SRSoutput::firstIncTime
firstIncTimeStr	SRSoutput::firstIncTimeStr
estRestTime	SRSoutput::estRestTime
estRestTimeStr	SRSoutput::estRestTimeStr

Field Name	SRSoutput Data Fields
estAssessTime	SRSoutput::estAssessTime
complete_time	SRSoutput::complete_time
job_complete_time	SRSoutput::job_complete_time
msgType	SRSoutput::msgType
validStateKey	SRSoutput::validStateKey
prevStateKey	SRSoutput::prevStateKey
stateValue	SRSoutput::stateValue
condStatus	SRSoutput::condStatus
condPhases	SRSoutput::condPhases
customersOut	SRSoutput::customersOut
typeMask	SRSoutput::typeMask
partition	SRSoutput::partition
ncg	SRSoutput::ncg
appliedRule	SRSoutput::appliedRule
priority	SRSoutput::priority
custCall	SRSoutput::custCall
pri_w	SRSoutput::pri_w
pri_sw	SRSoutput::pri_sw
pri_p	SRSoutput::pri_p
pri_e	SRSoutput::pri_e
custCrit	SRSoutput::custCrit
crit_1	SRSoutput::crit_1
crit_2	SRSoutput::crit_2
crit_3	SRSoutput::crit_3
crit_tot	SRSoutput::crit_tot
revenue	SRSoutput::revenue
numSndDev	SRSoutput:: numSndDev
numSupplied	SRSoutput::numSupplied
outageRef	SRSoutput::outageRef
oldCondID	SRSoutput::oldCondID
sort_col_1	SRSoutput::sort_col_1
sort_col_2	SRSoutput::sort_col_2
sort_col_3	SRSoutput::sort_col_3

Field Name	SRSoutput Data Fields
sort_col_4	SRSoutput::sort_col_4
sort_col_5	SRSoutput::sort_col_5
sort_col_6	SRSoutput::sort_col_6
sort_col_7	SRSoutput::sort_col_7
sort_col_8	SRSoutput::sort_col_8
sort_col_9	SRSoutput::sort_col_9
life_support	SRSoutput::life_support
outage_type	SRSoutput::outage_type
old_outage_type	SRSoutput::old_outage_type
group_type	SRSoutput::group_type
messages	SRSoutput::messages
customer_phone	SRSoutput::customer_phone
numb	SRSoutput::numb
inc_outage	SRSoutput::inc_outage
devAlias	SRSoutput::devAlias
customerName	SRSoutput::customerName
rule_set	SRSoutput::rule_set
crit_k	SRSoutput::crit_k
crit_c	SRSoutput::crit_c
crit_d	SRSoutput::crit_d
from_str	SRSoutput::from_str
mergedEvents	SRSoutput::mergedEvent
numMerged	SRSoutput::numMerged
hasClue	SRSoutput::hasClue
ctrlZoneHdl1	SRSoutput::ctrlZoneHdl1
ctrlZoneHdl2	SRSoutput::ctrlZoneHdl2
ctrlZoneHdl3	SRSoutput::ctrlZoneHdl3
ctrlZoneHdl4	SRSoutput::ctrlZoneHdl4
ctrlZoneHdl5	SRSoutput::ctrlZoneHdl5
ctrlZoneHdl6	SRSoutput::ctrlZoneHdl6
ctrlZoneName1	SRSoutput::ctrlZoneName1
ctrlZoneName2	SRSoutput::ctrlZoneName2
ctrlZoneName3	SRSoutput::ctrlZoneName3

Field Name	SRSoutput Data Fields
ctrlZoneName4	SRSoutput::ctrlZoneName4
ctrlZoneName5	SRSoutput::ctrlZoneName5
ctrlZoneName6	SRSoutput::ctrlZoneName6
who_responsible	SRSoutput::who_responsible
who_completed	SRSoutput::who_completed
resp_modify_time	SRSoutput:: resp_modify_time
xRef	SRSoutput::xRef
yRef	SRSoutput::yRef
highestIncPri	SRSoutput::highestIncPri
referralGroup	SRSoutput::referralGroup
who	SRSoutput::who
firstCrewTime	SRSoutput::firstCrewTime
additionalDevHdls	SRSoutput::additionalDevHdls
additionalCondHdls	SRSoutput::additionalCondHdls
relatedEvents	SRSoutput::relatedEvents
additionalCondStatuses	SRSoutput::additionalCondStatuses
numAdditional	SRSoutput::numAdditional
numRelated	SRSoutput::numRelated
maxNum	SRSoutput::maxNum
maxNumRelated	SRSoutput::maxNumRelated
routeId	SRSoutput::routeId
repair_minutes	SRSoutput::repair_minutes
crew_eta	SRSoutput::crew_eta
sheetNums	SRSoutput::sheetNums
generic_col_1	SRSoutput::generic_col_1
related_event	SRSoutput::related_event
related_type	SRSoutput::related_type

Incident Object Fields

These are the fields available in the external incident object 'I' and for sorting incidents. For each field the equivalent Incident data access function is listed.

Incident Field Name	Function Call
getGroupingFlag	Incident::getGroupingFlag()
getMessages	Incident::getMessages()
getClosestMeshNode	Incident::getClosestMeshNode()
getHdl	Incident::getHdl()
getSnd	Incident::getSnd()
getCondHdl	Incident::getCondHdl()
getPartition	Incident::getPartition()
getPhases	Incident::getPhases()
getCondStatus	Incident::getCondStatus()
getEvent	Incident::getEvent()
getPriority	Incident::getPriority()
getType	Incident::getType()
getClue	Incident::getClue()
getBitmask	Incident::getBitmask()
getTotalPriority	Incident::TotalPriority()
getLifeSupportCode	Incident::getLifeSupportCode()
getCriticalCustomer	Incident::getCriticalCustomer()
getCallCancelInd	Incident::getCallCancelInd()
getCallbackLateInd	Incident::getCallbackLateInd()
getTcode	Incident::getTcode() (This maps to INCIDENTS.COMPLAINT.)
getTroubleQueue	Incident::getTroubleQueue()
getShortDesc	Incident::getShortDesc()
getDrvInst	Incident::getDrvInst()
getCID	Incident::getCID()
getCustomerName	Incident::getCustomerName()
getCtype	Incident::getCtype() (This maps to INCIDENTS.CUSTOMER_TYPE.)
getAddrBuilding	Incident::getAddrBuilding()
getAddrStreet	Incident::getAddrStreet()
getAddrCity	Incident::getAddrCity()
getOrderNumber	Incident::getOrderNumber()

Incident Field Name	Function Call
getGenernalArea	Incident::getGeneralArea()
getMeterId	Incident::getMeterId()
getDeviceAlias	Incident::getDeviceAlias()
getNcg	Incident::getNcg()
getExternalId	Incident::getExternalId()
getInputTime	Incident::getInputTime()
getCallbackRequest	Incident::getCallbackRequest()
getCallbackDataTime	Incident::getCallbackDataTime()
getOpComment	Incident::getOpComment()
getCustomerPhone	Incident::getCustomerPhone()
alternatePhone	Incident::alternatePhone()
userName	Incident::userName()
getXRef	Incident::getXRef()
getYRef	Incident::getYRef()
getExternallySent	Incident::getExternallySent()
getAONFlag	Incident::getAONFlag()
getROCFlag	Incident::getROCFlag()
active	Incident::active()

Permanent Order Object Fields

These are the fields that are always available in the external order object 'O'. These fields are read-only. The contents of each field are listed.

Incident Field Name	Contents
order	The order's Handle
event	The order's key event Handle
eventless	A boolean indicating that the order has lost all it's events. This is true for a period between the time the key event became non-existent and the time the order is completed, often as a result of an EventNonexistent trigger triggering an Output Document that completes the order.

Permanent Relationship Object Fields

These are the fields that are always available in the external relationship object 'O'. These fields are read-only. The contents of each field are listed.

Incident Field Name	Contents
relation	The relationship's Handle
event	The relationship's key (parent) event Handle
type	The relationship's type
Active	A boolean indicating that the relationship is active. This is false for a period between the time the relationship was deleted in Oracle Utilities Network Management System and the time the relation is deleted, often as a result of a RelationDeleted trigger triggering an Output Document that deletes the relation.

Chapter 6

SCADA Measurements

This chapter includes the following topics:

- Introduction to scadapop
- Configuration
- Recaching Measurements
- Information Model

Introduction to scadapop

The Oracle Utilities Network Management System (NMS) can accept updates from a variety of external (outside) Supervisory Control And Data Acquisition (SCADA) systems. Multiple external SCADA systems can be connected to a single NMS instance. If necessary a different adapter can be used for each external SCADA a utility wishes to connect to. For example one SCADA system might use the ICCPAdapter, one the generic NMS SCADA adapter (RTAdapter) another might use a project specific or custom SCADA adapter. In all cases the NMS objects and attributes that can be updated from each external SCADA adapter must be defined before NMS can accept input from these SCADA systems. This section describes one mechanism for populating the necessary configuration tables with objects and attribute information so the SCADA adapter can pass information into NMS.

This assumes your ATTRIBUTES table has already been populated with the superset of available SCADA measurement attributes using your `<project>_attributes.dat` file. List any additional SCADA measurement attributes needed that have not already been defined in the `nms_attributes.dat` and load them using the normal set up process. Keep in mind that digitals should stay in the (0-999) range, analogs should be (1000-1999), and equipment should be from (2000-2999).

Configuration

RDBMS Configuration

Tables involved:

- **scada_measurements_st**: standard SCADA measurements configuration table. This is a staging table used by DDService for populating the production SCADA measurement tables.

- **digital_measurements**: production SCADA measurements table for digital measurements. Only DDService should write to this table.
- **analog_measurements**: production SCADA measurements table for analog measurements. Only DDService should write to this table.
- **scada_ids**: SCADA definition table.
- **scada_points**: optional model build attribute table that is used by the scadapop executable - to help populate the scada_measurements_st staging table. If you want to use scadapop – you need to populate the scada_points table.
- **scada_control_st:** SCADA controls staging table. Used by DDService to populate the production scada_controls table.
- **scada_controls:** production SCADA controls table. Only DDService should normally write to this table (when it is updated).

  Note: The scada_points table only needs to be populated if using scadapop. It is normally populated via device class driven attribute population during the model build process.

To configure the standard SCADA input RDBMS staging table (scada_measurements_st) using the scadapop utility. See Using SCADAPOP on page 7-6.

Recaching Measurements

To load the SCADA measurements staging tables into the production (run-time) SCADA measurements tables, the following command must be run:

```
UpdateDDS -recacheMeasurements
```

When this command is invoked, DDService will merge the scada_measurements_st table into the analog_measurements and digital_measurements tables, merge the scada_controls_st table into the scada_controls table (adding and removing rows as necessary), and load the updated scada_controls, analog_measurements and digital_measurements tables into memory.

When new measurements are added, all fields in the production measurements table are populated from the staging tables.

When existing measurements are updated, all fields are copied from the scada_measurements_st staging table except the following columns because these columns can contain operator entered data (operator override values for example) - and should not be overwritten. Indeed this is the primary reason for using the staging table - to avoid overwriting these run-time columns:

- QUALITY
- VALUE
- RESERVE_VALUE
- RESERVE_QUALITY
- COMMENTS
- ACTIVE

Information Model

Database Schema

SCADA_IDS Database Table

The schema for this table is defined in ces_schema_scada.sql file.

The script, OPAL_scada_ids.sql, populates generic SCADA sources for the OPAL model. A source is any SCADA system that can provide information to the adapter. There could be one SCADA source defined for each of multiple SCADA vendors, or a utility may choose to divide their territory into multiple regions, with each region acting as a separate SCADA source. Each SCADA source must have a unique name as well as a unique integer ID.

SCADA_IDS

Column	Data Type	Description
ID	NUMBER	Numeric identifier for each "SCADA source" that we want RTI to process.
SCADA_NAME	VARCHAR2(32)	Name for the SCADA source
ADAPTER_TYPE	VARCHAR2(32)	Adapter type for this SCADA source.
ACTIVE	VARCHAR2(1)	Is the adapter active (Y/N)

SCADA_POINTS Database Table

The SCADA_POINTS table contains a row for each device in the Oracle Utilities Network Management System operations database that has SCADA information associated with it. Each record has a "scada_name" column which, in order to populate one of the measurements tables, must match a valid "scadapop -scada <scada>" parameter - where <scada> is a valid and active scada_ids.scada_name value. Where there is a match, a row is populated in the scada_measurements_st table for each defined attribute.

The SCADA_POINTS table is normally populated via device driven attribute population during the model build process. It is a staging table for the scadapop-driven measurement point population process. It is not accessed during adapter execution.

The schema for this table can be found in the file ces_retain_scada.sql

SCADA_POINTS

Column	Data Type	Description
H_CLS	SMALLINT	Object handle class
H_IDX	INTEGER	Object handle index
SCADA_NAME	VARCHAR2(32)	SCADA system name
RTU_ALIAS	VARCHAR2(32)	SCADA point RTU name - for demand scans (optional)
RTI_ALIAS	VARCHAR2(128)	SCADA point name
FEEDER	VARCHAR2(100)	Nominal feeder for this point (optional)
SUBSTATION	VARCHAR2(100)	Nominal substation for this point (optional)
TEMPLET	VARCHAR2(32)	Template to use in <project>_rti.dat file for this model device
PARTITION	INTEGER	Partition of this object
BIRTH	DATE	Date object activated into the model
BIRTH_PATCH	INTEGER	Patch which activated this object
DEATH	DATE	Date object de-activated into the model
DEATH_PATCH	INTEGER	Patch which de-activated this object
ACTIVE	VARCHAR2(1)	Active flag (Y/N)

SCADA_MEASUREMENTS_ST Database Table

The scada_measurements_st table is a staging table used to help populate the analog_measurements and digital_measurements (production) tables. The schema for this table can be found in the file ces_retain_services.sql.

SCADA_MEASUREMENTS_ST

Column	Data Type	Description
H_CLS	SMALLINT	Object handle class
H_IDX	INTEGER	Object handle index
PARTITION	INTEGER	Object partition
ATTRIBUTE	SMALLINT	Data attribute index (from ATTRIBUTES table)
TTL	SMALLINT	Time-To-Live Value
LIMIT_GROUP_ID	INTEGER	Object limit group
RTI_ALIAS	VARCHAR2(128)	RTI device measurement name
RTI_ALIAS_A	VARCHAR2(128)	RTI device measurement name for phase A. Only applies for digital measurements and only used by the MultiSpeak SCADA adapter.
RTI_ALIAS_B	VARCHAR2(128)	RTI device measurement name for phase B. Only applies for digital measurements and only used by the MultiSpeak SCADA adapter.
RTI_ALIAS_C	VARCHAR2(128)	RTI device measurement name for phase C. Only applies for digital measurements and only used by the MultiSpeak SCADA adapter.
SCADA_ID	INTEGER	SCADA source identifier - matches scada_ids.id
RTU_ID	VARCHAR2(32)	RTU ID - unique name within SCADA system.
QUALITY	INTEGER	Quality code
VALUE	FLOAT	Manual Replace Value
UPDATE_FLAG	INTEGER	Manual Replace Flag. Set this to `1` to be sure that the adapter always sends the first value it receives, even when it matches the current NMS value.
ICCP_OBJECT	VARCHAR2(32)	ICCP mms object name
DISPLAY_ID	VARCHAR2(64)	ID for display call up
CONTROLLABLE	VARCHAR2(1)	Is this row controllable
ACTIVE	VARCHAR2(1)	Is this row active
SOURCE	VARCHAR2(33)	Source of measurements
COMMENTS	VARCHAR2(512)	Comment associated with
OFF_NOMINAL_TIME	DATE	Time quality went off-nominal

Column	Data Type	Description
NORMAL_STATE	INTEGER	Normal state for measure. Only used for digital measurements.
MEASUREMENT_TYPE	VARCHAR2(1)	Measurement Type: A -- Analog measurement D -- Digital measurement
ICCP_DATA_SET	VARCHAR2(64)	Data Set Name
FEEDER	VARCHAR2(100)	Nominal feeder name
SUBSTATION	VARCHAR2(100)	Nominal substation name
GANG	VARCHAR2(1)	'Y'/'N' - is this a gang measurement.

Chapter 7

Generic SCADA Adapter

This chapter includes the following topics:

- Introduction
- Generic SCADA Adapter Configuration
- Measurement Configuration
- RDBMS Configuration
- Configuration/Execution Sequence
- Information Model
- MultiSpeak Integration
- DataRaker Integration

Introduction

The Generic SCADA Adapter (executable name: RTAdapter) is an Oracle Utilities Network Management System adapter that can process incoming analogs, digitals and conditions from an external SCADA system. The RTAdapter can also send field device control requests and condition updates from the Network Management System to an external SCADA system.

This section is used to guide the user in the configuration of the Oracle Utilities Network Management System Generic SCADA Adapter. It is assumed that the Oracle Utilities Network Management System is installed and functional.

Generic SCADA Adapter Configuration

RDBMS vs. File Mode

Each Generic SCADA Adapter instance can process input from either Network Management System RDBMS queuing tables (preferred) or from flat files, but not both. A Network Management System can support multiple file-based RTAdapter instances, but only one RTDBAdapter (configured for RDBMS input).

RDBMS mode: The external SCADA system writes SCADA updates to a set of RDBMS queuing tables. Updates are processed by RTAdapter on a first-in-first-out basis.

File mode: Each external SCADA system writes SCADA "scan files" to a dedicated directory that an appropriately configured RTAdapter can access in read/write mode. Incoming "scan files" are processed on a first-in-first-out basis.

Configure Adapter to Run as an NMS System Service

Configure the Generic SCADA Adapter to run as an Oracle Utilities Network Management System service by updating the `$NMS_HOME/etc/system.dat` file to include the Generic SCADA Adapter as a system service. There are three main sections of the system.dat file where a service needs to be defined: the **service**, **program**, and **instance** sections.

See the `$NMS_BASE/templates/system.dat.template` file for examples of how to configure the Generic SCADA Adapter. Search for RTAdapter in the file and copy those lines to `$NMS_HOME/etc/system.dat` file. Make sure all lines are uncommented so SMService will find them as active. You must either restart SMService or start SMService with a "**-f ~/etc/system.dat**" command line option to pick up changes to the `$NMS_HOME/etc/system.dat` configuration file.

> **Notes:** The adapter process is often given a configuration name adapted from the SCADA system from which it is receiving data. Reference the RTDBAdapter configuration option in the `$NMS_BASE/templates/system.dat.template` for an example of this type of configuration. The first parameter after the keyword **program** must match the **-process_name** parameter. The **-scada** option specifies the name of the SCADA for this instance of the RTAdapter (from the SCADA_IDS table) and often matches the **-process_name** option (though this is not required).

SRS_RULES Configuration for Generic SCADA Adapter

The Generic SCADA Adapter currently supports a few options that can only be configured via the Network Management System SRS_RULES mechanism. The Configuration Assistant tool provides rule specific details on what impact these SRS_RULES have on how the Generic SCADA Adapter responds to various forms of input. The adapter reloads SRS_RULES configuration when Service Recache button is clicked in Configuration Assistant.

> **Note:** Only the rule names are listed here; use the Oracle Utilities Network Management System Configuration Assistant's **Event Management Rules** tab for details and to update the rules, if necessary.

- RT_PLANNED_OUTAGE_QUALITY
- RT_STALE_PROCESSING_CYCLE
- RT_CALCULATED_POINTS
- RT_CALCULATED_POINT
- RT_CONDITIONS_IN
- RT_CONDITIONS_OUT
- RT_RESPONSE_IN
- RT_IGNORE_TIMESTAMP
- RT_HEARTBEAT_CYCLE
- RT_LEC_KEY

Command Line Options for Generic SCADA Adapter

The command line for the Generic SCADA Adapter provides the following options:

Command Line Option	What it does
-cert_file <full path to certificate>	The private certificate used for incoming device/screen navigation messages from the SCADA system. This is the server's private key concatenated with its certificate, as used by GSOAP.
-client_cert	Whether to require public certificates for incoming screen navigation messages from the SCADA system. This is the client key concatenated with the certificate.
-controls <script name>	Tells RTAdapter to call this `project/SCADA` specific script when NMS outbound control requests (digital open/close or analog set point control) are made. This script is typically customized to trigger a SCADA specific action on the external system. **Note:** this option **MUST** be set for RTAdapter to do any processing of outbound control requests.
-debug	Enable debugging. Other common facility specific debug options are also possible. Common options include: -debug RT_NFY 1 # debug for notify messages -debug RT_CALC 1 # debug for calculated points -debug RT_CTRL 1 # debug for control msg processing -debug RT_PROC 1 # debug for outage processing -debug RT_WATCH 1 # debug to track high-level activity -debug RT_COND 1 # debug for condition processing -debug RT_STALE 1 # debug for stale processing
-delimiter <char>	Allows a project to override the default input delimiter character (|) with the specified character.Used for file based input and, potentially, for setting multiple external quality code strings, which must be mapped back to integers internally, via RDBMS-based input.
-dir <directory>	For file based input this is the directory containing scada data export scan files. For RDBMS based input this must be set to 'RDBMS'. (Required)
-idle <cycles>	Number of processing cycles to wait without processing any data before sending an alarm.
-interval <interval>	Seconds between processing (polling) cycles. (Required)
-lock	Use file locking to prevent file overwrite during file read (if scan file names are not unique). File based input only.
-no_analogs	Do not scan the scada_analog_in table or process analogs.
-noStaleProcessing	Do not generate stale quality codes. This is useful primarily in testing and training environments when you have two instances of the adapter configured to use the same SCADA points, and you do not want them to both generate conflicting stale quality flags.

Command Line Option	What it does
-offline	For testing purposes - when a control request is received - simulate the external SCADA system and operate the device.
-offlineDelay <seconds>	Seconds between receiving a CONTROL request (in offline mode) and responding. Used to help simulate an actual SCADA system.
-operate	Operate (change status of) model devices, otherwise generates pseudo alarms only.
-process_name <name>	Network Management System message bus process name for this process. If the first parameter after the keyword program in the first column of the system.dat file is something other than the second parameter - then you must set the -process_name option to the same string as the first parameter. This is only necessary if you need to run more than one instance of RTAdapter or you want RTAdapter to be known as some other name within the Network Management System messaging bus. Network Management Process message bus process names must be unique.
-retain	For RDBMS input only. Retain data in the scada_digital_in and scada_condition_in tables after data is processed. Generally for validation/debug - not general purpose production use or long term logging.
-scada <scada>	External SCADA name. (Required). Must match an active SCADA entry in the scada_ids table (scada_ids.scada_name).
-watch <level>	Show data being processed, minimal info. <level> is an integer that maps to the RT_WATCH debug facility.
-config <scada>	When used to support the NMS MultiSpeak adapter we want RTAdapter and MultiSpeak to process the "same" measures from a scada_id perspective. This option allows specification of an alternate scada (which must still be an active scada_name entry in the scada_ids table). Using this option allows run-time configuration for the RTAdapter and MultiSpeak adapters in the scada_synonyms, scada_states and scada_links tables to NOT overlap.

Scripts Used by the Generic SCADA Adapter

The Generic SCADA Adapter calls various scripts to communicate and coordinate with an external SCADA system. Example scripts are provided. The example scripts use curl and expect the external SCADA systems will support some form of RESTful Web Service integration. You can create project-specific versions/variations of these scripts that are appropriate for a specific SCADA system.

Script	Description
rti-notify-start	Notifies the SCADA system that the Generic SCADA Adapter has restarted. Call from RTAdapter on restart.
rti-operate	Example script for use with the RTAdapter `controls` option (for example, -controls rti-operate). This script can either forward to SCADA or simulate a SCADA positive response when device control requests are sent from NMS. The rti-operate-curl script is a simplified version of the rti-operate script. It is an example of how to use curl to call an external system to propagate NMS initiated device operation requests to an external system. Either script (or a project alternative) can be specified via the "-controls <script>" command line option.
rti-pseudo	pseudo measures are not actually telemetered from the field but may be maintained manually within a SCADA system. NMS identifies a pseudo measurement as having the corresponding scada_measurements_st.ttl=2. If a pseudo measure is changed by an NMS operator this script will be called to support optional propagation of the update to the external SCADA system.
scada-reload	Notifies the SCADA system that the set of measurements has changed due to an NMS model build.
rti-operate-curl	Another example script for use with the RTAdapter `controls` option. Sends the control request to the SCADA system as a RESTful web-service request via curl.

CES_PARAMETERS Configuration

The adapter needs to be restarted for CES_PARAMETERS configuration changes to take effect.

Parameter	Description
SCADA_URL	Used to identify the external SCADA. RTAdapter will send navigation and SCADA controls to the SCADA system via this URL. The SCADA_URL should be the root URL. The scripts will add instruct, reload, navigate, etc. to the URL as needed. This is a site-specific parameter.
SCADA_CERT	The certificate to connect to the SCADA system. This is the client piece of a certificate generated by the SCADA system. This is a site-specific parameter.

Measurement Configuration

The Generic SCADA Adapter comes with a configuration support tool (scadapop) that can be used to help populate the standard SCADA configuration (scada_measurements_st) table used for incoming SCADA data and the outbound SCADA controls (scada_controls_st) table.

Using SCADAPOP

The scadapop executable uses the `<project>_rti.dat` parameter file to help define what SCADA measurements and controls are desired for each class of object in the NMS model. The scadapop process reads the scada_points table to determine which instance of each class of data SCADA configuration is desired for. The scadapop process merges the instance information in the scada_points table with the class definition information in the `<project>_rti.dat` configuration file to perform the desired SCADA configuration.

The scadapop mechanism makes the assumption that each instance of a given device class in the NMS generally contains the same set of NMS SCADA measurement types.

For cases where more or less actual SCADA measurements are available for a given class of device than "normal" there are two approaches that can be used. The first (and likely preferred) approach is an exception based mechanism that is trigged by populating the SCADA_POINTS.TEMPLET field. If the SCADA_POINTS.TEMPLET field is populated scadapop will treat the TEMPLET field like any other CLASS definition in the `<project>_rti.dat` file and use it instead of any associated CLASS definition. The second approach is simply the understanding that NMS measurements do not have to have a match in SCADA - though that is obviously preferred. If no corresponding SCADA measurement exists the field will just never be populated.

Note that the CLASS: and TEMPLET: definitions within the `<project>_rti.dat` file share the same name space so care must be taken to make sure the definitions do NOT overlap. For example, TEMPLET: definitions could always start with "t_" to signify it was a TEMPLET and minimize the possibility of overlapping with CLASS: definitions.

An example `<project>_rti.dat` template can normally be found on an active NMS environment under $NMS_BASE/templates/rti.dat.template.

The syntax for the `<project>_rti.dat` file content is as follows.

- Primary (initial) keyword tokens:
  - CONTROL:
  - CLASS:
  - TEMPLET:
- Secondary keyword tokens (dependent on a primary keyword):
  - NMS_ACTION: dependent on previous CONTROL:
  - Analog: dependent on previous CLASS: or TEMPLET:
  - Digital: dependent on previous CLASS: or TEMPLET:
- Keyword parameters:
  - CONTROL: <unique string>
    - unique name for a set of SCADA controls – starts with alpha character.
  - CLASS: <NMS class name>
    - can be an abstract class – for use with inheritance

- TEMPLET: <template name>
  - must be unique among all CLASS: and TEMPLET: definitions.
- Analog: <NMS analog attribute name> [CTRL_tag]
  - NMS analog attribute name must be a valid NMS analog attribute name
  - CTRL_tag must match a previous CONTROL: definition
  - Only valid below a CLASS: or TEMPLET: definition
- Digital: <NMS digital attribute name> [CTRL_tag] [Nominal]
  - NMS digital attribute name must be a valid NMS digital attribute name
  - CTRL_tag must match a previous CONTROL: definition
  - Nominal, if specified, should be 1 as default is 0 and only 0/1 allowed.
  - Only valid below a CLASS: or TEMPLET: definition

The following three keywords are in reference to a single valid `scada_controls_st` entry and are comma separated on the same line. They are cumulatively associated with the previous "CONTROL:" block.

NMS_ACTION: `<integer> - NMS integer for this action`
EXT_ACTION: `<integer> - external (SCADA) integer for this action`
TIMEOUT: `<integer> - number of seconds to wait for feedback.`

Notes on keywords/values:

- The nominal value for the special NMS digital "Status(0)" attribute is maintained via the NMS model build process in network_components.nominal_status field and cannot be specified via this mechanism – as Status is a 3-phase digital representation with values from 0->7.
- If the scada_points.templet field matches a specified TEMPLET: definition than this TEMPLET will take priority over any other (CLASS: based) processing.
- If the scada_points.h_cls field matches or inherits from the specified CLASS: then the associated, Analog:, Digital: and (optionally) CONTROL: configuration will be applied. This is inheritance based processing.
- The colon (**:**) character is a keyword delimiter. The colon must appear as the first character after the keyword in order for the keyword to be recognized.
- Keywords must match exactly.
- Lines with a leading # are treated as comments (ignored).
- Leading blank space is ignored.
- Blank lines are ignored.
- Attributes are associated to last defined CLASS: or TEMPLET: statement.

Example `<project>_rti.dat` Configuration

```
CONTROL: CTRL_setpoint
   NMS_ACTION:100,EXT_ACTION:10,TIMEOUT:40

CONTROL: CTRL_switch
   NMS_ACTION:1,EXT_ACTION:0,TIMEOUT:40
   NMS_ACTION:2,EXT_ACTION:1,TIMEOUT:40
```

```
CLASS: _scada_switch
   Digital: Status      CTRL_switch
   Digital: AutoReclose CTRL_switch 1
   Digital: door        1
   Analog: Amps_A
   Analog: Amps_B
   Analog: Amps_C

CLASS: _voltage_reg
   Analog: reg_setpoint CTRL_setpoint

TEMPLET: t_bellwether
Analog:   Volts
```

To configure the standard SCADA measurement staging tables (scada_measurements_st and optional scada_controls_st) using scadapop, follow steps similar to the following:

Specify which devices have SCADA (via scada_points table):

1. The **scada_points** table can be populated via standard attribute population during model build construction/update or it can be populated after the model is built/updated by a custom (project specific) process.
2. Populate **scada_points** RDBMS table via model build device attribute configuration.

   To set up the scada_points table as a standard Network Management System attribute table generally involves the following RDBMS tables:

   - **device_attributes**: standard model build attribute configuration.
   - **scada_points**: SCADA specific attribute table.

This option involves populating at least four attributes in the scada_points attribute table:

1. **scada_name:** Name of SCADA, as defined in scada_ids.scada_name (for example, RTAdapter)
2. **rtu_alias:** Optional Remote Terminal Unit (RTU) name responsible for this measurement.
3. **substation:** Nominal substation for the device (optional).
4. **feeder:** Nominal feeder for the device (optional).
5. **rti_alias:** Unique base name for this device.
6. **templet:** Optional field that can override use of CLASS (by specified TEMPLET) via scadapop for this device.

Once the scada_points table is populated, the scadapop program can be used to expand the information in the scada_points attribute table to fully populate the more generic **scada_measurements_st** and **scada_controls_st** staging tables.

Note: A given field device corresponds to a given scada_points.rti_alias and would typically be a switch of some kind often reporting both digital status and multiple analog values, for example. It could also be a transformer reporting analog values with or without status.

Review the example Network Management System OPAL device_attributes configuration file as an example of how to configure the NMS model build process to populate the scada_points table for use with scadapop. For more information on the model build process, see the Network Management System Model Build process documentation.

Once the **scada_points** table is populated, the scadapop program can be used to expand this information to fully populate the **scada_measurements_st** staging tables and (optionally) the **scada_controls_st** table.

Run scadapop -h to get command line options. In general:

```
scadapop [-debug [n]] -partition <n> -initFile <file>
         [-nonUniq||-attrName] -scada <scada> [-controls]
         [-separator <c>] [-warnings]
```

`-debug <n>`	Turns debug on <to level n>
`-partition <n>`	Populate partition n (0 = all partitions)
`-initFile <file>`	Initialization file (<project>_rti.dat)
`-scada <scada>`	Specific SCADA to process (scada_ids.scada_name)
`-nonUniq`	Do not append attribute to rti_alias (legacy support)
`-attrName`	Append attribute name (rather than attribute number) for unique measurements.
`-controls`	Populate scada_controls_st table
`-separator <c>`	Use `<c>` as the character between the device name and attribute
`-warnings`	Turn on data warnings. By default only errors are displayed.

The <project>_rti.dat file is the configuration file used by the scadapop program. Based on data in this file, model information (gang operable or not) and entries in the **scada_points** table, scadapop populates the **scada_measurements_st** staging table and (optionally) the **scada_controls_st** table.

The **scada_points** table should contain a single record (row) for each device in the Network Management System model that has SCADA measurements (attributes) associated with it. Each active scada_points.rti_alias value must be unique since this is the basis for scada measurement names that scadapop will generate. Each record has a "scada_name" column which, in order to populate the **scada_measurements_st** staging table, must match the scadapop -scada <scada> value.

By default scadapop will append a dash "-" followed by the NMS attribute number to each rti_alias - other than for attribute=0 (status) where nothing will be appended. The -attrName option will similarly append the dash and the NMS attribute name to each rti_alias - except where attribute=0. If the "-separator <c>" option is used, the specified <c> character will be used instead of the default dash separator for the same purpose.

Examples of scadapop command line execution**:**

1. `scadapop -partition 0 -initFile ${NMS_DATA_FILES}/OPAL_rti.dat -scada <mySCADA> -separator ^ -attrName`

   This example will populate the **scada_measurements_st** for all partitions for the SCADA named *mySCADA* in scada_ids.scada_name. It will use the caret symbol (^) separator and will append attribute names (not numbers) to each device to construct unique measurement names.

2. `scadapop -partition 3111 -initFile rti.dat -scada <mySCADA> -attrName`

   This example will populate the **scada_measurements_st** for partition 3111 for the SCADA named *mySCADA*. It will also append a dash (-) and the name of each NMS attribute to the base scada_points.rtu_name.

RDBMS Configuration

The Network Management System Generic SCADA Adapter (RTAdapter) utilizes several RDBMS tables for both configuration and run-time operation.

Configuration tables include:

The tables below are configuration tables that generally need to be populated via project specific sql scripts. Example configuration for these tables is provided for the Oracle (OPAL) model in `$NMS_HOME/sql/OPAL_scada.sql`.

- **SCADA_MEASUREMENTS_ST:** SCADA point configuration staging table used to populate the ANALOG_MEASUREMENTS and DIGITAL_MEASURMENTS run-time SCADA measurement tables - required.
  - The SCADA_MEASUREMENTS_ST staging table can be populated via the scadapop process or by a project specific mechanism.
  - The SCADA_MEASUREMENTS_ST table can be truncated and repopulated at will while DDService is active (running). Once SCADA_MEASUREMENTS_ST is populated as desired the `UpdateDDS -recacheMeasures` command will send a message to DDService to merge updates from the SCADA_MEASUREMENTS_ST staging table into the ANALOG_MEASUREMENTS and/or DIGITAL_MEASURMENTS runtime SCADA tables - preserving any existing run-time quality codes and/or stored SCADA data values. Note the same process (UpdateDDS -recacheMeasures) also merges information from the SCADA_CONTROLS_ST staging table (if populated) into the SCADA_CONTROLS runtime table.
- **SCADA_IDS:** SCADA Adapter configuration table - required for both RTAdapter and optional scadapop processes.
  - Maps name of each SCADA adapter to a unique integer used to specify SCADA specific configuration in related SCADA configuration tables.
- **SCADA_STATES:** SCADA Adapter configuration table – maps strings to integers - optional.
- **SCADA_SYNONYMS:** SCADA Adapter configuration table – maps SCADA input to NMS attributes and/or conditions - required.
- **SCADA_LINKS:** SCADA Adapter configuration table used to initially identify an active external Live Energy Connect server. Used when Live Energy Connect is using RDBMS (rather than more proprietary LEC Real-Time-Protocol) for updates into NMS. Also used for (related) routine heartbeat processing.

- **SCADA_POINTS:** staging table used by the scadapop process to help populate SCADA_MEASUREMENTS_ST and SCADA_CONTROLS_ST –optional.

  Note: The RTAdapter process does not require population of the SCADA_POINTS table. The use of SCADA_POINTS as a staging table is merely one optional solution for the ultimate goal of configuring the required SCADA measurements staging table (SCADA_MEASUREMENTS_ST) and optionally the SCADA_CONTROLS_ST table. If the SCADA_POINTS table is used it can be populated via the standard Network Management System Model Build process or via a project specific mechanism.

- **SRS_RULES:** see SRS_RULES Configuration for Generic SCADA Adapter on page 7-2 for information about RTAdapter-specific SRS_RULES.

Runtime Tables Used by RTAdapter Regardless of Polling Mode

- **ANALOG_MEASUREMENTS:** Standard NMS table defining analog measurements from an external SCADA.
- **DIGITAL_MEASUREMENTS:** Standard NMS table defining digital measurements from an external SCADA.
- **SCADA_VIEW:** NMS maintained view on network_components, analog_measurements, digital_measurements, attributes, classes and units tables. Used by RTAdapter and/or external SCADA systems for access to current NMS SCADA information.
- **SCADA_CONTROLS:** SCADA run-time control table - defines which NMS outbound control actions are valid for each NMS device and attribute – required to support NMS outbound SCADA controls.
  - The SCADA_CONTROLS_ST table can be populated via the scadapop process or by a project specific mechanism.
  - The SCADA_CONTROLS table is loaded by the DDService process on startup and can be reloaded by a running DDService by issuing the `UpdateDDS -recachMeasures` request.

Runtime Queuing Tables Used by RTAdapter in RDBMS Polling (Preferred) Mode

- **SCADA_ANALOG_IN:** RTAdapter polling table used to queue incoming analog SCADA updates.
- **SCADA_DIGITAL_IN:** RTAdapter polling table used to queue incoming digital SCADA updates.
- **SCADA_CONDITION_IN:** RTAdapter polling table used to queue incoming condition (note, tag, etc) SCADA updates.
- **SCADA_RESPONSE_IN:** Optional RTAdapter polling table used to register responses to NMS outbound control or tag requests. Must be activated via corresponding RT_RESPONSE_IN srs_rule.

Configuration/Execution Sequence

File-Based (RTAdapter)

To get RTAdapter up and running.

1. Login to Network Management System admin account with standard OPAL model configured and running.
2. Create RTAdapter specific RDBMS tables:

   `ISQL nms_schema_scada.sql`

   - creates scada_ids table
   - creates scada_states table
   - creates scada_synonyms table
   - creates scada_links table
   - creates scada_links_ops table
   - creates scada_emulator_digital_out table
   - creates scada_emulator_analog_out table
   - creates scada_calc_func table
   - creates scada_clac_alias table

   `ISQL nms_retain_scada.sql`

   - creates scada_points table
   - creates scada_analog_in table (only used with "-dir RDBMS" option)
   - creates scada_digital_in table (only used with "-dir RDBMS" option)
   - creates scada_condition_in table (only used with "-dir RDBMS option)
   - creates scada_controls table
   - creates scada_response_in table (only used with `-dir RDBMS` option)
   - creates scada_controls table
   - creates scada_controls_st table
   - creates scada_analog_history table
   - creates scada_reg_dev_ops_history table
3. The OPAL_scada.sql file contains sample population data for the **scada_ids, scada_synonyms**, **scada_states**, **ces_parameters**, **scada_calc_func**, **measure_placement_st**, and **measure_placement** tables for the OPAL model. You must modify and rename this file for your project. The example below is for the OPAL model using file based updates (not RDBMS polling).

   `ISQL OPAL_scada.sql`

4. Run`"scadapop -partition 0 -initFile $NMS_DATA_FILES/OPAL_rti.dat -scada RTAdapter"`
5. This should populate **scada_measurements_st** staging table - confirm that you have entries in this table before moving to the next step.

6. Validate the RTAdapter is in the `$NMS_HOME/etc/system.dat` file (see directions above).
7. Recommend using `-watch` and possibly the `-debug` options for RTAdapter to start; helps to identify configuration issues.
8. If the system.dat file is using the `$NMS_SCADA_SCAN_FILE_DIR` environment variable to specify the SCADA scan file directory, make sure this environment variable points to a directory that the RTAdapter process can both read and write. Generally, this means a directory owned by the id that is executing RTAdapter. For example, `mkdir ~/scada`. At the same time, suggest creating a test data holding directory (for example, `mkdir ~/scada/tst`).
9. Stop and restart Oracle Utilities Network Management System services (`sms-start`).
10. Make sure RTAdapter is running.
11. The `$NMS_HOME/templates/rtiadapter.dat.template` file contains sample RTAdapter incoming data blocks. You can use the example data blocks in this file to validate basic RTAdapter functionality.

Example

Copy example data blocks from the rtiadapter.dat.template to individual test files under the RTAdapter scan file directory (normally `${NMS_SCADA_SCAN_FILE_DIR}` – often `${NMS_ROOT}/scada`. Copy files to `~/scada/tst` (using the example configuration above). Cut example text out of rtiadapter.dat.template SCADA data file to "live" RTAdapter scan file directory to test.

1. Copy the following lines into a file (for example, BR2413_open).

   ```
   DATA
   OBJECT|BR2414
   BREAKER_POS|OPEN
   END_DATA
   ```

   Copy the following lines into a file (for example, BR2413_close).

   ```
   DATA
   OBJECT|BR2414
   BREAKER_POS|CLOSED
   END_DATA
   ```

2. Copy BR2413_open and BR2413_close to `~/scada/tst` (following example above).
3. `cd ~/scada/tst`
4. cp BR2413_open .

   This should cause the BR2413 file to be read and processed by RTAdapter (you should see the BR2413 device open in the standard OPAL model).
5. cp BR2413_close .
6. This should cause the BR2413 file to be read and processed by RTAdapter (you should see the BR2413 device close in the standard OPAL model).
7. Follow other examples for conditions and quality codes.
8. Turn debug on RTAdapter to see what is going on. You should be able to send RTAdapter debug messages on the fly:

   ```
   Action any.RTAdapter debug on
   ```

9. Validate that devices are changing state in the Network Management System viewer as you execute steps 5 and 6 above ("`cp BR2413_open .`" followed by "`cp BR2413_close .`") sequence over and over.

SCADA Data - File Input

When RTAdapter is configured to poll and process files, the SCADA system sends fixed format files. The following format rules generally apply:

1. Actual SCADA data appears between ^DATA (the string DATA at the start of a line) and ^END_DATA.
2. Records between DATA and END_DATA are identified by OBJECT which must match a unique analog_measurements.rti_alias or digital_measurements.rti_alias entry.
3. SYNCHRONIZE|TRUE is a special case used to synchronize conditions and is outside the standard DATA/END_DATA block. If set the line following SYNCHRONIZE|TRUE should be something like TYPE|note - to indicate the data that follows is to be used to synchronize "note" class conditions. For SYNCHRONIZE scan files the condition action code should be "syn" - not "add" or "rem".
4. All other fields are generally ignored.

5. For digital_measurements: device status: open or closed, battery low, etc. Example:

```
DATA
OBJECT|BR2414
BREAKER_POS|OPEN
END_DATA
```

6. For analog measurements: In this example, Amps_A=attribute 1501, Amps_B=attribute 1502, Amps_C=attribute 1503:

```
DATA
OBJECT|BR2414-1501
AMPS_A|2.1|4096
OBJECT|BR2414-1502
AMPS_B|2.2
OBJECT|BR2414-1503
AMPS_C|2.3|SUSPECT
END_DATA
```

   Both digital and analog measurements can include quality codes for each attribute. Quality codes are part of the standard Oracle Utilities Network Management System attribute definition and are contained within a 32-bit integer field. Bits 0->15 are reserved for Oracle Utilities Network Management System purposes. Bits 16->31 are available for project specific configuration. Quality codes are generally defined in the **quality_codes** configuration table. In the analog example above (`AMPS_C|2.3|SUSPECT`) the `SUSPECT` string must be defined in the scada_states table and map to a valid quality code integer. Integers can also be used directly to provide quality codes (`AMPS_A|2.1|4096`).

7. Generic SCADA conditions (generally notes or tags - could be any condition) are also supported. To send a condition something like the following would be required:

```
DATA
OBJECT|BR2414
NOTE_0|add|WHO=system|TIM=2009-02-27T16:22:17|TXT=NOTE_0
txt|EXT=BR2414-note_0
END_DATA
```

   The above text would "add" a note condition to the model on the device mapped to BR2414. The following keyword phrases can be used to specify common condition fields:

8. WHO= who should be recorded as the creator of the condition - must be a valid NMS user name, the "system" (NMS Admin user name), or the name of the SCADA system that sent the update.

9. PHS= What phase to declare a condition for. This is a bitmask field representing affected phases. 1=A phase, 2=B phase, 4=C phase. 7=ABC phase, *etc*. If specified, it must be >= 1 and <= 7.

10. TIM= ISO timestamp for when the condition was added. Timestamp format must be defined in your `$DATEMSK` file.

11. TXT= Text string for the condition.text field (notes.text. tags.text, etc). Condition text string cannot contain newlines or the separator character - whatever it is configured to be. Text will truncate at the first newline or separator character.

12. EXT= SCADA unique identifier for the created condition. This field is necessary to allow the external system to later remove the condition.

13. To remove the SCADA condition above:

```
DATA
OBJECT|BR2414
```

```
NOTE_0|rem|WHO=system|TIM=2009-10-27T16:22:17|EXT=BR2414-note_0
END_DATA
```

RDBMS Table Polling (RTDBAdapter)

To get RTAdapter to use the RDBMS queue table mechanism (rather than file-based polling), follow steps similar to the following:

1. Follow steps (1-5) as noted above for the file based polling example above.
2. In the `~/etc/system.dat` configuration file verify the RTAdapter option `-dir` RDBMS.
3. If the `-dir` option is set to anything other than keyword **RDBMS**, RDBMS polling will NOT be enabled.
4. Recommend using `-watch` and, possibly, the `-debug` options to help identify configuration issues.
5. Stop and restart Oracle Utilities Network Management System services (sms-start).
6. Make sure RTDBAdapter is running.
7. Insert row into SCADA_DIGITAL_IN table either using alias or h_cls and h_idx with status = 'N'. Either the unique alias or the h_cls/h_idx must be specified, but not both.
8. The primary key on the scada_digital_in table is the id column – which is generally populated by a trigger on the scada_digital_in table that fires on insert and populates the id column with the next value in a sequence. Other example RDBMS input examples can be found in the `$NMS_ROOT/templates/rtadapter.dat.`template file.

   Example sql statement:

   ```
   INSERT into scada_digital_in (
   alias,
   phases
   operation,
   operation_date,
   quality
   source,
   status
   ) VALUES (
     'BR2414',     /* Unique measurement name */
      '7',         /* Phase bitmask - 7=ABC, 1=A, 2=B, 4=C, etc */
      '0',         /* Defined in scada_synonyms - 0=open, 1=close */
      SYSDATE,
      '0',         /* Quality bitmask - value >65535 and <2^32 */
      'SCADA',
      'N'
   );
   COMMIT WORK;
   ```

Information Model

Database Schema

SCADA_POINTS Database Table

The SCADA_POINTS table is an optional table that can either be populated via the model build process or via a project specific mechanism. It can be used to populate the **scada_measurements_st** staging table via the scadapop executable.

Column	Data Type	Description
H_CLS	NUMBER	Handle instance class.
H_IDX	INTEGER	Handle instance index.
SCADA_NAME	VARCHAR(32)	SCADA system name.
RTU_ALIAS	VARCHAR(64)	SCADA Remote Terminal Unit for measurements.
RTI_ALIAS	VARCHAR2(128)	SCADA point (base) name - unique
TEMPLET	VARCHAR2(32)	Template name used for scadapop exception processing
PARTITION	INTEGER	Model partition for this object.
BIRTH	DATE	Date object activated into the model.
BIRTH_PATCH	INTEGER	Model patch which activated with this object.
DEATH	DATE	Date object de-activated from the model.
DEATH_PATCH	INTEGER	Model patch which de-activated this object.
ACTIVE	VARCHAR2(1)	Active flag (Y/N).
SUBSTATION	VARCHAR2(100)	Nominal substation for this device.
FEEDER	VARCHAR2(100)	Nominal feeder for this device.

The schema for this table is defined in the file nms_retain_scada.sql.

SCADA_IDS Database Table

The SCADA_IDS table identifies a specific SCADA name with a numeric ID that is used for RTAdapter (and other) SCADA adapter configuration.

Column	Data Type	Description
ID	NUMBER	Numeric identifier for each "scada source" that we want RTI to process.
SCADA_NAME	VARCHAR(32)	Name for the scada source
ADAPTER_TYPE	VARCHAR(32)	Adapter type associated with this SCADA. Valid values are ICCP, MULTISPEAK, and RTADAPTER.
ACTIVE	VARCHAR(1)	'Y'/'N' - adapter is active or not.

The script, OPAL_scada.sql, populates generic SCADA sources for the OPAL model. A source is any SCADA system that can provide information to the adapter. There could be one SCADA source defined for each of multiple SCADA vendors, or a utility may choose to divide their territory into multiple regions, with each region acting as a separate SCADA source. Each SCADA source must have a name as well as a unique integer ID. There can only be one instance of the database polling RTAdapter (**RTDBAdapter**) running for a given instance of NMS.

SCADA_SYNONYMS Database Table

The SCADA_SYNONYMS table contains all the synonyms for attribute name or values (for example, KV_3, AMP_A, and CLOSE) used by RTAdapter in processing SCADA data input.

Column	Data Type	Description
Id	INTEGER	Unique integer - primary key.
scada_id	INTEGER NOT NULL	Matches scada_ids.id
keyword	VARCHAR2(32) NOT NULL	SCADA unique attribute keyword string from SCADA system. Generally maps to an NMS attribute name but this is not required unless the scada_synonyms.attribute_alias field is left blank. If the scada_synonyms.attribute_alias field is left blank than the scada_synonyms.keyword field must map to a valid NMS attribute name - from attributes.name (table.column). For conditions this is unique name used by external SCADA to identify the condition class and condition status (NOTE, TAG_RED, TAG_BLUE, etc). NMS condition class must be defined in scada_synonyms.attribute_alias.
value	VARCHAR2(32)	For digitals: Customer value associated with keyword that indicates digital state (OPEN, CLOSED, 0, 1). For analogs: This field can be null. For conditions: Must be "add", "rem", "syn" or "end". The "syn" and "end" values are used for synchronization requests.

Column	Data Type	Description
process_type	VARCHAR2(5)	For digitals: 'D' For analogs: 'A' - If the corresponding scada_synonyms.int_value is >0, then that value will be used as an absolute value to filter incoming analogs. For analogs: 'A_PCT' indicates the corresponding scada_synoynms.int_value should be interpreted as a "percentage change" filter for incoming analogs. For a 1% filter int_value=0.01, for a 0.5% filter int_value=0.005, *etc*. For conditions: 'C'
attribute_alias	VARCHAR2(20)	Attribute name from NMS attributes table. For digitals: The only way to get a model object to change status is to set this value to 'Status'. All other values are for digital attributes. For analogs: This field is optional and can be set to '' (empty string). If this value is '' (blank), the scada_synonyms.keyword is used as the NMS attribute name. For conditions: This field is the condition class name (tag, note, etc).
status_value	VARCHAR2(20)	Numeric or string from scada_states.alias table. For digital status: This field is generally set to DEVICE_CLOSE, DEVICE_OPEN (defined in scada_states table), 0 (open), 1 (close). For analogs: This field is NULL. For conditions: This field is either a numeric condition status or a string that maps to a numeric condition status via the scada_states table. If it is a string it MUST start with an alpha (non-numeric) character.
int_value	NUMBER	For digitals: not used. For analogs: If process_type is 'A', then int_value is used as an absolute value to filter incoming analogs. If process_type is 'A_PCT', then int_value is used as a "percentage" filter value. An int_value=0.01 would filter incoming A_PCT analog measurements by 1%. For conditions: not used.

Column	Data Type	Description

stale	CLOB	For Digitals: not used.
		For Analogs: stale is a JSON value that specifies optional stale processing values on a per attribute and, optionally, per device class basis.
		Example JSON stale configuration:
		`'{"default" : "30",`
		`"breaker" : "45"}'`
		
		The example configuration (for a given attribute) sets default stale processing at 30 seconds. If a corresponding analog measurement comes in on a "breaker" class device, it will use 45 seconds for a stale processing threshold; otherwise (for any other class of device), it will default to 30 seconds. As many classes as desired can be added in this manner.
		Example stale configuration can be found in the `$NMS_SQL_FILES/OPAL_scada.sql` file and/or the `$NMS_BASE/templates/rtadapter.dat.template` file.

For each implementation, define the customer specific <project>_scada.sql file to specify the required synonyms.

SCADA_STATES Database Table

This table exists to allow for entering a character string in place of a more obscure integer. For example 'DEVICE_CLOSE' instead of 2, ABC instead of 7 for phases, etc.

Column	Data Type	Description
SCADA_NAME	VARCHAR2(32)	Name of scada from scada_ids.scada_name
ALIAS	VARCHAR2(32)	Alias to map to integer
VALUE	INTEGER	Integer value to map to

nms_scada.sql includes examples of commonly-used entries.

SCADA_DIGITAL_IN Database Table

The SCADA_DIGITAL_IN table can be used by RTAdapter to queue incoming digital SCADA updates. RTAdapter, if configured to do so, will periodically poll this table and check for unprocessed rows (`status='N'`). If unprocessed rows are found, RTAdapter will attempt to update the model according to data provided. Note that the database sequence **scada_digital_in_sequence** must be set up properly to create the primary key (SCADA_DIGITAL_IN.ID) value on insert.

If the `-retain` option is **not** used, records are **always** deleted after they are processed and the only record of any failure is in the RTAdapter log itself. It is generally recommended that production systems run this way (without the `-retain` option).

If the `-retain` option is used all rows are retained in the SCADA_DIGITAL_IN table. Processed records have SCADA_DIGITAL_IN.STATUS column set to "S" after they are processed. If an error occurs the SCADA_DIGITAL_IN.STATUS column will be set to "E," and the SCADA_DIGITAL_IN.ERROR_CODE and SCADA_DIGITAL_IN.ERROR_DESCRIPTION columns should be populated with some indication of the problem.

Note that use of the `-retain` option is not generally intended as a production option; rather it is a temporary mechanism to help validate and test the interface. With the `-retain` option, a busy (noisy) SCADA system can cause the SCADA_DIGITAL_IN table to grow without bound. In this case, the size of the SCADA_DIGITAL_IN table must in turn be managed by the customer, which creates a maintenance issue.

If SCADA_DIGITAL_IN.ATTRIBUTE is a numeric, it must match a valid NMS attribute number (for example, 0 is topology status). If non-numeric, both the SCADA_DIGITAL_IN.ATTRIBUTE and SCADA_DIGITAL_IN.OPERATION values must be properly defined in the SCADA_SYNONYMS and SCADA_STATES tables.

One of two methods can be used to identify a specific NMS attribute measurement.

1. The rti_alias values in the DIGITAL_MEASUREMENTS table must uniquely identify each measurement, you do not need to specify an attribute on input. This is the preferred way to operate.
2. A valid NMS handle AND attribute number - in this case the alias can be left blank. This is not often used as it requires the external system to know NMS handles and attribute numbers. This mechanism is for backward compatibility only and is not recommended for new projects.

Column	**Data Type**	Description
ID	VARCHAR2(32)	scada_digital_in sequence generated pk
H_CLS	NUMBER(38,0)	NMS class of device – can be null if alias is not null.
H_IDX	NUMBER(38,0)	NMS index of device – can be null if alias is not null.
ALIAS	VARCHAR2(128)	SCADA point alias - can be null if h_cls and h_idx are NOT null. If not null it is suggested this value (alone) uniquely identify a measurement.

Column	**Data Type**	Description
ATTRIBUTE	VARCHAR(32)	SCADA attribute. If numeric, it must match a valid NMS attribute number. If it is a string, it must map to a valid NMS attribute number via the scada_synonyms table. If the ALIAS above is unique it is NOT necessary to include an attribute value on input.
PHASES	VARCHAR(4)	Intended phases for operation. If numeric must be between 1 and 7 – where 1 is A and 7 is ABC. If a string must map to a valid numeric via the scada_states table.
OPERATION	VARCHAR(32)	Operation. If numeric and used for attribute 0 (topology status) it must be 0(open) or 1(close) and the phase attribute must be set to indicate which phases are intended to operate. If a string it must map to a valid code for the attribute involved via a combination of the scada_synonyms table and/or the scada_states table.
OPERATION_DATE	DATE	Time the operation occurred in the field. If left blank will default to SYSDATE.
OPERATION_COUNT	NUMBER(10)	How many operations have occurred since the last scan – for momentaries.
CAPTURE_DATE	DATE	When operation captured by NMS - generally set to SYSDATE.
QUALITY	VARCHAR2(32)	Quality code for attribute – can be numeric or a string. Either way it must be properly configured in NMS and must ultimately translate to be greater than 0xFFFF (65535) and less than or equal to 0xFFFF. All quality codes below 0xFFFF are reserved for NMS.
SOURCE	VARCHAR(32)	Data source/user name
STATUS	VARCHAR2(1)	Status of request: N = New E = Error S = Success
ERROR_CODE	NUMBER(38,0)	Error code
ERROR_DESCRIPTION	VARCHAR(256)	Error code description.

SCADA_ANALOG_IN Database Table

The SCADA_ANALOG_IN table can be used by RTAdapter to queue incoming SCADA updates. RTAdapter, if configured to do so, should periodically poll this table and check for data that has changed since the last update of the SCADA_ANALOG_IN.CAPTURE_DATE column. If potential updates are found RTAdapter will attempt to update the model according to the data provided. If an error occurs an error is written to the RTAdapter log file. If the update is successful no changes are made to the SCADA_ANALOG_IN table. This is to support the idea of continuous update of the SCADA_ANALOG_IN table from an external entity. The SCADA_ANALOG_IN table can be updated many times between RTAdapter scans. RTAdapter will "harvest" whatever appears to have changed since the last scan. It is expected that some form of merge statement would be used to update the SCADA_ANALOG_IN table – inserting if a record does not exist and updating otherwise – which triggers an update on the capture_date column.

One of two methods can be used to identify a specific NMS attribute measurement.

1. The `rti_alias` values in the ANALOG_MEASUREMENTS table must uniquely identify each measurement, you do not need to specify an attribute on input. This is the preferred way to operate.
2. A valid NMS handle AND attribute number - in this case the alias can be left blank. This is not often used as it requires the external system to know NMS handles and attributes. This is for backward compatibility only and is not recommended for new projects.

Column	Data Type	Description
H_CLS	NUMBER(38,0)	NMS class of device
H_IDX	NUMBER(38,0)	NMS index of device
ALIAS	VARCHAR2(128)	SCADA point alias - can be null if h_cls and h_idx are NOT 0.
ATTRIBUTE	VARCHAR(16)	SCADA attribute. If it is numeric it must match a valid NMS attribute. If it is a string it must be defined in scada_synonyms and map to a valid NMS attribute. If it is NOT provided the provided ALIAS must be provided and MUST uniquely identify a measurement.
MEASUREMENT	NUMBER	Analog update value.
MEASUREMENT_DATE	DATE	When operation occurred in field – not presently used.

Column	Data Type	Description
CAPTURE_DATE	DATE	When measurement captured – could be updated by trigger on table update. This is the how RTAdapter determines what to examine during periodic polls.
QUALITY	VARCHAR2(32)	Quality code for attribute – can be numeric or a string. Either way it must be properly configured in NMS and must ultimately translate to be greater than 0xFFFF (65535) and less than or equal to 0xFFFF. All quality codes below 0xFFFF are reserved for NMS.
SOURCE	VARCHAR(32)	source/user name

SCADA_CONDITION_IN Database Table

The SCADA_CONDITION_IN table can be used by RTAdapter to queue incoming analog SCADA condition updates. Records with 'add' actions add conditions to the NMS model, and 'rem' records remove the condition.

Records with 'syn' actions indicate the start of a full synchronization. All subsequent 'syn' records will be added to the NMS if not already active. The 'end' action indicates the end of the synchronization sequence. Any NMS conditions of that condition class without corresponding 'syn' records are then removed from the NMS (via 'end' processing).

Column	Data Type	Description
ID	NUMBER(38,0)	Unique identifier for the row. Generated by the scada_in_sequence.
H_CLS	NUMBER(38,0)	NMS class of device
H_IDX	NUMBER(38,0)	NMS index of device
ALIAS	VARCHAR2(128)	Alias of the NMS device
COND_KEY	VARCHAR2(32)	SCADA_SYNONYM.KEYWORD for the condition type.
EXTERNAL_ID	VARCHAR(64)	External identifier for this condition.
STATUS	VARCHAR2(1)	Process status ('N'=New, 'E'=Error, 'S'=Success)

Column	Data Type	Description
ACTION_DATE	DATE	When operation occurred in field.
CAPTURE_DATE	DATE	When the condition was captured. This is the how RTAdapter determines what to examine during periodic polls.
ACTION	VARCHAR2(3)	Action ('add' - Add, 'rem' - Remove, 'syn' – Synchronize, 'end' – End the synchronization)
SOURCE	VARCHAR(32)	source/user name
PHASES	NUMBER(38,0)	The bitwise integer phases for the condition.
TEXT	VARCHAR(128)	The text for the condition.

SCADA_MEASUREMENTS_ST Database Table

SCADA_MEASUREMENTS_ST is a staging table used to capture relevant information for each measurement attribute. It can be populated via the scadapop executable or via project-specific means. It can be completely rebuilt at will as it is NOT a run-time table. The "`updateDDS -recacheMeasures`" utility sends a message to DDService to merge measurements defined in this table with the run-time **analog_measurements** and **digital_measurements** tables.

Column	Data Type	Description
H_CLS	NUMBER	Object handle
H_IDX	NUMBER	Object index
PARTITION	NUMBER	Object partition handle
ATTRIBUTE	NUMBER	Data attribute index (from ATTRIBUTES table)
TTL	NUMBER	Time-To-Live Value. If set to 0 value will **not** be broadcast dynamically. If set to 2, the value will be considered a pseudo measurement.
LIMIT_GROUP_ID	INTEGER	Object limit group
RTI_ALIAS	VARCHAR2(128)	RTI device measurement name
RTI_ALIAS_A	VARCHAR2(128)	RTI device measurement name for phase A - MultiSpeak status updates.

Column	Data Type	Description
RTI_ALIAS_B	VARCHAR2(128)	RTI device measurement name for phase B - MultiSpeak status updates.
RTI_ALIAS_C	VARCHAR2(128)	RTI device measurement name for phase C - MultiSpeak status updates.
SCADA_ID	INTEGER	SCADA source identifier - matches scada_ids.id
RTU_ID	VARCHAR2(32)	RTU ID - unique name within SCADA system. Not generally used.
QUALITY	INTEGER	Quality code
VALUE	FLOAT	Current value – from Manual Replace or from SCADA if configured for persistence.
UPDATE_FLAG	INTEGER	Update flag
ICCP_OBJECT	VARCHAR2(32)	ICCP mms object name
DISPLAY_ID	VARCHAR2(64)	ID for display call up – if different than rti_alias.
CONTROLLABLE	VARCHAR2(1)	Is this row controllable
ACTIVE	VARCHAR2(1)	Is this row active
SOURCE	VARCHAR2(33)	Source of measurements
COMMENTS	VARCHAR2(512)	Comment
NORMAL_STATE	INTEGER	Nominal state – only used for Digital measurements.
OFF_NOMINAL_TIME	DATE	Time quality went off-nominal
MEASUREMENT_TYPE	VARCHAR2(1)	'A' for Analog or 'D' for Digital.
FEEDER	VARCHAR2(100)	Nominal feeder
SUBSTATION	VARCHAR2(100)	Nominal substation
GANG	VARCHAR2(1)	Y/N is this a gang measurement or not - for topology status.
ICCP_DATA_SET	VARCHAR2(64)	ICCP Data Set

ANALOG_MEASUREMENTS Database Table

The ANALOG_MEASUREMENTS table is a run-time table generally maintained by DDService.

Column	Data Type	Description
H_CLS	SMALLINT	Object handle
H_IDX	INTEGER	Object index
PARTITION	INTEGER	Object partition handle
ATTRIBUTE	SMALLINT	Data attribute index (from ATTRIBUTES table)
TTL	SMALLINT	Time-To-Live Value
LIMIT_GROUP_ID	INTEGER	Object limit group
RTI_ALIAS	VARCHAR2(128)	RTI device measurement name
SCADA_ID	INTEGER	SCADA source identifier - matches scada_ids.id
RTU_ID	VARCHAR2(32)	RTU IDID - unique name within SCADA system.
QUALITY	INTEGER	Quality code
VALUE	FLOAT	Manual Replace Value
UPDATE_FLAG	INTEGER	Manual Replace Flag
ICCP_OBJECT	VARCHAR2(32)	ICCP mms object name
DISPLAY_ID	VARCHAR2(64)	ID for display call up
CONTROLLABLE	VARCHAR2(1)	Is this row controllable
ACTIVE	VARCHAR2(1)	Is this row active
SOURCE	VARCHAR2(33)	Source of measurements
COMMENTS	VARCHAR2(512)	Comment associated with
OFF_NOMINAL_TIME	DATE	Time quality went off-nominal

DIGITAL_MEASUREMENTS Database Table

The DIGITAL_MEASUREMENTS table is a run-time table generally maintained by DDService.

Column	Data Type	Description
H_CLS	SMALLINT	Object handle
H_IDX	INTEGER	Object index
PARTITION	INTEGER	Object partition handle
ATTRIBUTE	SMALLINT	Data attribute index (from ATTRIBUTES table)
TTL	SMALLINT	Time-To-Live Value
LIMIT_GROUP_ID	INTEGER	Object limit group
RTI_ALIAS	VARCHAR2(128)	RTI device measurement name
SCADA_ID	INTEGER	SCADA source identifier
RTU_ID	VARCHAR2(32)	RTU ID
QUALITY	INTEGER	Quality code
VALUE	FLOAT	Manual Replace Value
UPDATE_FLAG	INTEGER	Manual Replace Flag
ICCP_OBJECT	VARCHAR2(32)	ICCP mms object name
DISPLAY_ID	VARCHAR2(64)	ID for display call up
NORMAL_STATE	INTEGER	Normal state for measure
CONTROLLABLE	VARCHAR2(1)	Is this row controllable
ACTIVE	VARCHAR2(1)	Is this row active
SOURCE	VARCHAR2(33)	Source of measurements
COMMENTS	VARCHAR2(512)	Comment associated with
OFF_NOMINAL_TIME	DATE	Time quality went off-nominal

SCADA_ANALOG_HISTORY Database Table

SCADA_ANALOG_HISTORY is a run-time table that can be used to capture analog updates sent to NMS from an external (SCADA or similar) system.

Column	Data Type	Description
H_CLS	NUMBER(38)	Device class associated measurement
H_IDX	NUMBER(38)	Device index associated measurement
ATTRIBUTE	NUMBER(38)	Attribute number of measurement
VALUE	NUMBER	Captured value of measurement
SCADA_TIME	DATE	Time value was captured

To capture analog updates into the SCADA_ANALOG_HISTORY table, the NMS "trending" option must be active (not commented out) in the `<project>_licensed_products.dat` file.

The SCADA_ANALOG_HISTORY table is typically populated via Oracle RDBMS trigger after every update to the ANALOG_MEASUREMENTS.SCADA_TIME column. By default, an insert into the SCADA_ANALOG_HISTORY table is triggered after any ANALOG_MEASUREMENTS.SCADA_TIME update. The `$NMS_SQL_FILES/nms_retain_scada.sql` file contains the default trigger for the ANALOG_MEASUREMENTS table that can be used to populate the SCADA_ANALOG_HISTORY table.

If a project wishes to capture a subset of analog updates (for example, you want to capture updates for a subset of measurement attributes), the scada_analog_update trigger would need to be modified or replaced with a more restrictive trigger that reflects which analog updates you would like to capture. You can use Oracle SQL Developer (or similar) tool to ensure an appropriate trigger is active for the ANALOG_MEASUREMENTS table.

> **Note:** If this SCADA analog trend capture feature is used aggressively (for more than a million entries in the SCADA_ANALOG_HISTORY table, for example), **it is strongly recommended that Oracle RDBMS partitioning also be used.** Oracle partitioning is a separately licensed Oracle RDBMS Enterprise Edition option. If you are licensed for Oracle RDBMS partitioning, then you must also indicate you want to use partitioning in Oracle NMS by ensuring the "partitioning" option is active in the Oracle NMS **<project>_licensed_products.dat** file (not commented out).

The default NMS partitioning scheme stores data in the SCADA_ANALOG_HISTORY table in 7 day partitions. With adequate partitioning, performance should not be significantly impacted unless you attempt to load data across many partitions. The assumption is that it would be most common for operators to request analog trend data for the last one to four weeks; thus pulling data from one to five partitions (allowing for boundary conditions across partitions). If your needs are different, the partitioning scheme can be changed by the project. In the end, using Oracle RDBMS partitioning reduces the need to aggressively prune the SCADA_ANALOG_HISTORY table and makes pruning more of an "available data space" issue and less of a "necessity to maintain for performance" issue.

If you do **not** use partitioning, you will likely need to implement a more aggressive pruning process to prevent the SCADA_ANALOG_HISTORY table from growing without bound, becoming difficult to manage, and (potentially) impacting performance. A project that implements SCADA_ANALOG_HISTORY trending and does **not** use partitioning will be vulnerable to performance degradation over time - especially when they eventually do decide to purge. Oracle RDBMS partitions (in particular) greatly simplify and optimize the process of capturing, using, and maintaining a limited window of historical data (purging a

partition has minimal impact on RDBMS). Without partitioning, the most practical options for improved performance are more aggressive pruning of the SCADA_ANALOG_HISTORY table and/or Oracle RDBMS hardware upgrades.

Any time a change is made to `<project>_licensed_products.dat`, the `nms-setup` script must be executed to capture the desired licensed product changes and build the desired configuration. For NMS tables to be built as partitioned tables by the `nms-setup` script, the NMS partitioning option must be active on a clean (initial) NMS model setup (`nms-setup -clean`). The `nms-setup` script will **not** convert existing non-partitioned tables to partitioned tables.

> **Note:** If you have an existing (non-partitioned) NMS data model, are licensed to use partitioning, and you want to partition the SCADA_ANALOG_HISTORY table (without destroying your current data model), it is possible, but requires project specific effort beyond the scope of this document.

To help manage the pruning process for RDBMS history tables, NMS includes a pruning procedure called PURGE_HISTORY_TABLES, which is defined in the `$NMS_SQL_FILES/nms_schema_flm.sql` file. The procedure can be configured to retain a defined number of weeks of history via the CES_PARAMETERS table (as specified in the `attrib='RETAIN_HISTORY_RECORDS'` record).

> **Note:** See `$NMS_SQL_FILES/nms_parameters.sql` for example configuration of the RETAIN_HISTORY_RECORDS parameter.

Once captured, the NMS client has configuration options to visualize trends for selected time slices of analog values in the SCADA_ANALOG_HISTORY table.

External Access Schema

To support external SCADA or 'SCADA-like' integration, NMS includes an optional limited NMS access RDBMS schema. This alternate schema is a set of RDBMS views, synonyms, and grants to access specific primary NMS RDBMS user tables (for the purpose of restricting access to only tables/views that an external SCADA type system needs to interact with NMS). This optional schema uses the NMS primary NMS RDBMS access username to help create the external SCADA access schema name. For example, if the primary NMS RDBMS user name is "nms," then the external SCADA access schema would be "nms_scada." The "nms_scada" schema name allows access to a subset of NMS RDBMS tables/views. The default tables/views/synonyms are defined by the SCADA_GRANTS_AND_SYNONYMS procedure in the `$NMS_SQL_FILES/nms_schema_readonly.sql` file.

The following tables are granted access by the SCADA_GRANTS_AND_SYNONYMS procedure:

- **SCADA_VIEW:** View of NMS measurements and current status.
- **SCADA_TAG_VIEW:** View of active project specific tags to export to SCADA.
- **SCADA_IDS:** Valid SCADA systems NMS can interact with.
- **SCADA_EMULATOR_ANALOG_OUT:** Output from PFEmulator (for use with the Oracle Utilities Network Management System Training Simulator).
- **SCADA_EMULATOR_DIGITAL_OUT:** Output from PFEmulator (for use with the Oracle Utilities Network Management System Training Simulator).
- **SCADA_ANALOG_IN:** Access to SCADA_ANALOG_IN – for incoming analogs.
- **SCADA_DIGITAL_IN:** Access to SCADA_DIGITAL_IN – for incoming digitals.
- **SCADA_CONDITION_IN:** Access to SCADA_CONDITION_IN – for incoming tags.
- **SCADA_RESPONSE_IN:** Access to SCADA_RESPONSE_IN - for outbound control/tag command response feedback.

In particular, SCADA_VIEW is an RDBMS view that can be used by an external SCADA system to see what measurements NMS is currently configured for as well as the last known qualities and values NMS has recorded for those measurements. The intent of this view is that it can be used by the external SCADA system to not only know what measurements NMS is configured for, but also to use the corresponding last reported qualities and values to optimize re-sync (integrity check) processing. Presumably, an external SCADA could access this view and only send NMS updates for measures and qualities that do not sufficiently match what NMS has already recorded.

MultiSpeak Integration

If desired, the generic SCADA adapter can be used in conjunction with the NMS MultiSpeak (Java-based) SCADA adapter. The intent is to use the RTAdapter to provide a buffering mechanism for "noisy" SCADA systems that could potentially generate many periodic analog (or digital) updates. Using RTAdapter to capture and bundle incoming changes reduces the impact on the NMS CORBA Gateway and NMS CORBA publisher. Using RTAdapter with the "-dir RDBMS" option allows changes to be captured and sent in bulk to internal NMS Services.

If configured to do so, the NMS Web Gateway APIs used by the MultiSpeak SCADA interface will write to the SCADA_DIGITAL_IN and SCADA_ANALOG_IN tables when processing updates from an external SCADA, rather than submitting them directly to DDService. This behavior is controlled by three configuration properties, which can be added to the CentricityServer.properties file.

When using this option, since both RTAdapter and MultiSpeak will necessarily reference the same SCADA measurements, it is necessary to use the `"-config <scada>"` RTAdapter option. The `<scada>` value must still be a valid and active scada_name from the scada_ids table. The sole purpose of the `"-config <scada>"` option is to allow RTAdapter specific configuration within configuration tables shared with the MultiSpeak adapter. This allows RTAdapter and MultiSpeak to process the same measurements, but use adapter specific configuration.

1. intersys.use_db_for_scada_statuses

   If set to 'true' than device status updates received from SCADA system will be written to the SCADA_DIGITAL_IN database table.

2. intersys.use_db_for_scada_digitals

   If set to 'true' than updates to digital values received from SCADA system will be written to the SCADA_DIGITAL_IN database table.

3. intersys.use_db_for_scada_analogs

   If set to 'true' than updates to analog values received from SCADA system will be written to the SCADA_ANALOG_IN database table

By default all the above properties are set to 'false', which means that SCADA measurements will be sent directly to the internal DDService process.

In order to avoid conflict with MultiSpeak configuration options (shared by MultiSpeak adapter and RTAdapter) use the `"-config <scada>"` command line option for RTAdapter to allow RTAdapter specific config while referencing the same measurements as the MultiSpeak adapter. The `<scada>` value must still match a valid (alternative) scada_ids.scada_name value to leverage matching scada_synonyms and scada_states table configuration.

DataRaker Integration

The NMS RTAdapter can be configured to support integration with the Oracle DataRaker application. DataRaker captures large quantities of periodic Advanced Metering Infrastructure (AMI) data – typically once a day. AMI data typically includes usage information like meter load (kWH) and voltage for each interval – where intervals are typically hourly or every 15 minutes. By analyzing months (or more) of AMI usage data, DataRaker can detect a broad range of usage anomalies. A few examples include transformer overloads (by aggregating loads from all meters below the load transformer), voltage sags, voltage swells, and abnormal usage patterns.

If DataRaker analysis is routinely executed (for example, daily to pick up yesterday's AMI data), it can be beneficial to make at least a subset of the DataRaker discovered anomalies clearly visible to NMS operators. RTAdapter can be configured to "import" a set of DataRaker discovered anomalies as NMS conditions (symbols that show in the NMS Viewer or simply records in the NMS Condition Summary tool). These DataRaker anomalies are captured as NMS conditions in the **data_raker** RDBMS table via the RTAdapter. Once captured, these NMS conditions allow navigation back into DataRaker from NMS.

DataRaker provides raw data files (in DataRaker export file format) that must be mapped/translated to the RTAdapter formats noted below. Typically DataRaker would generate raw DataRaker export files containing the desired data on a relatively routine (daily or weekly) basis. The raw DataRaker files must be transformed (via project specific adapters) into the specified RTAdapter format files for subsequent consumption. A project specific adapter (likely a perl or python script) must be used to translate the DataRaker export format file into the RTAdapter import format data file. This allows a project to determine what DataRaker data they want to include/exclude and how they want to categorize the input data for their NMS operators.

The following three use cases describe how the DataRaker to NMS data integration can be managed by a project using the RTAdapter. The first use case is expected to be the most common – the others are options for NMS administrators to consider as necessary.

Use Cases

Use Case 1 – DataRaker Master (Minimal NMS Involvement)

For this use case, DataRaker is the master of all DataRaker discovered anomalies. This means the anomalies generated by a new DataRaker analysis execution completely replace whatever DataRaker anomalies (NMS conditions) that were previously reported to (or captured by) NMS. This has the advantage of not requiring any periodic updates from NMS operators. NMS operators can view the DataRaker conditions if they choose, act on them if they have time, etc., but they can also ignore the DataRaker conditions and be confident they will not accumulate in NMS over time.

To accomplish this, RTAdapter must be configured to scan files (not the RDBMS) for this instance of the adapter. Below is an example RTAdapter record from the system.dat file that could be applicable for this case:

```
program DataRaker RTAdapter -scada dataraker -interval 60 -dir ~/
dataraker
```

This means this RTAdapter instance will be known as DataRaker internal to NMS (on the message bus) and will look for configuration records that match scada_ids.id where scada_ids.scada_name='dataraker' in the SCADA_IDS RDBMS table. This id will then need to be matched by appropriate configuration in the SCADA_SYNONYMS and SCADA_STATES tables for this DataRaker instance of the RTAdapter. Note there is no required SCADA_STATES table configuration so it will not be further discussed in this section.

Example configuration:

- Records in the RTAdapter SCADA_SYNONYMS configuration table for DataRaker configuration use SCADA_IDS.ID=100 where SCADA_IDS.SCADA_NAME='dataraker' (to match example system.dat configuration noted above).
- The SCADA_SYNONYMS table configuration records noted below will allow the RTAdapter to process add, rem(ove) and syn(chronize) directive records from an RTAdapter input file for a single type of DataRaker condition (where NMS data_raker condition status=10). See the example OPAL_scada.sql file for more examples of DataRaker conditions. By default the NMS OPAL model is configured to handle 3 different DataRaker condition class statuses (Info=10, Warn=20, Alarm=30). To utilize OPAL type configuration the DataRaker Info, Warn and Alarm conditions must have the specified condition status values of 10, 20 and 30 respectively. These values are somewhat arbitrary and can be changed if necessary – but will require more project specific configuration. Entries for "DR_E2" are similar – just change status_value='20'. Entries for "DR_E3" are also similar – just change status_value='30'.

  ```
  INSERT into scada_synonyms (id, scada_id, keyword, value,
  process_type, attribute_alias, status_value)
     VALUES (tmp_seq.nextval, 100, 'DR_E1', 'add',   'C',
     'data_raker', '10');

  INSERT into scada_synonyms (id, scada_id, keyword, value,
  process_type, attribute_alias, status_value)
     VALUES (tmp_seq.nextval, 100, 'DR_E1', 'rem',   'C',
     'data_raker', '10');

  INSERT into scada_synonyms (id, scada_id, keyword, value,
  process_type, attribute_alias, status_value)
     VALUES (tmp_seq.nextval, 100, 'DR_E1', 'syn',   'C',
  ```

```
        'data_raker', '10');
```

Technically only the "syn" entry above is required for the first use case option (use RTAdapter to periodically synchronize DataRaker conditions). The "add" and "rem" options are configured just in case a project wants RTAdapter to also process individual add/rem directives in the RTAdapter input file. They are not required, but are used for Use Case 2 and Use Case 3.

Below is an example (translated) DataRaker export file suitable for RTAdapter consumption. You can give the file any valid file name, but it must ultimately be placed in the directory specified via "RTAdapter –dir <directory>" before it will be processed. The RTAdapter data files in the specified directory are processed in a first in, first out basis. The "OBJECT" keyword specifies an NMS object that must match an RTAdapter configured rti_alias (from scada_measurements_st.rti_alias) or an alias entry in the alias_mapping table where `db_type='OPS'` (default alias).

Any data_raker records in NMS that are NOT found in a RTAdapter synchronization input file will be deleted (based on the value of the external id provided by the EXT= keyword). NMS should only be left with conditions that are specified in the RTAdapter synchronization file when processing is completed. The pipe symbol "|" is a delimiter and can be changed via the `RTAdapter –delimter <n>` command line option. Replace "|" with your project specified delimiter in the examples below, if necessary:

```
SYNCHRONIZE|TRUE
TYPE|data_raker
DATA
OBJECT|xfmr_1
 DR_E1|syn|WHO=dataraker|TIM=2009-02-27T16:22:17|TXT=Over voltage
 detected|EXT=DR_E1-1
 DR_E1|syn|WHO=dataraker|TIM=2009-02-27T17:22:17|TXT=Xfmr within 50%
 of capacity|EXT=DR_E1-2
 DR_E2|syn|WHO=dataraker|TIM=2009-02-27T18:22:17|TXT=Xfmr within 75%
 of capacity |EXT=DR_E2-1
OBJECT|xmfr_2
 DR_E3|syn|WHO=dataraker|TIM=2009-02-27T16:22:17|TXT=Xfmr within 100%
 of capacity|EXT=DR_E3-1
 DR_E3|syn|WHO=dataraker|TIM=2009-02-27T19:22:17|TXT=Xfmr 120% of
 capacity|EXT=DR_E3-2
END_DATA
```

Detailed field descriptions of RTAdapter keywords:

- **SYNCHRONIZE|TRUE** is a keyword sequence that says this entire file is a synchronization file. Always specify exactly as noted for a synchronization file request. Must start in column 1.
- **TYPE** is a keyword that specifies what condition class the synchronization will focus on for all subsequent entries (data_raker in the above example). All entries in a given RTAdapter synchronization file must be of the same class. Must start in column 1.
- **OBJECT** is a keyword that precedes the common object id between NMS and DataRaker – as this is the link between the two systems. Normally this is a transformer alias.
- Project configured keywords – defined in scada_synonyms table
- **DR_E1** indicates we are dealing with a DataRaker "Info condition".
- **DR_E2** indicates we are dealing with a DataRaker "Warn condition".
- **DR_E3** indicates we are dealing with a DataRaker "Alarm condition".

- **syn** is a directive keyword that indicates we want to make sure this condition exists in NMS. It will update an existing condition or (if there is no current matching condition based on the EXT id) it will insert a new one.
- **WHO=** is a keyword that indicates what external system to indicate as the source of the condition directive. Normally this would be "dataraker" (or similar) for DataRaker integration.
- **TIM=** is a keyword that specifies a timestamp to go with the directive. Generally from the external system and must be specified in ISO format (the format you see above YYYY-MM-DDTHH:MM:SS – where hours are 00->24 and local time zone is assumed).
- **TXT=** is a keyword that specifies a brief summation of the condition detected. Can be up to 512 characters, but less is generally more. Suggest this be just enough to convey the type of issue detected – at least on first 30 characters of the text or so.
- **EXT=** is a keyword that specifies the unique external id for this condition. This should be the primary key for this condition. It could be generated by DataRaker or it could be generated by the NMS translation process. Ultimately it should be unique for at least every transformer and data_raker condition status combination in play (project specific).

Notes on the NMS unique key (EXT=) field. If DataRaker reports an anomaly for NMS transformer "xfmr_1" that maps to an NMS data_raker alarm (status=10) today – we could set the EXT= value to "xfmr_1-10" – indicating there is a data_raker alarm (status=10) on xfmr_1. This way if tomorrow DataRaker reports the same (or essentially the same) condition we would again translate to "xfmr_1-10" – and nothing would change on the NMS side for this condition. This scheme minimizes processing in NMS and allows "old" NMS data_raker conditions to "age" within NMS. This should provide some indication of how long DataRaker has been reporting similar issues for this transformer, which may be useful to NMS operators. Otherwise the conditions will be reported as new every day.

Use Case 2 – DataRaker Only Inputs New Conditions – NMS Deletes

Use Case 2 can use the same configuration as Use Case 1 other than the format of the input file to RTAdapter. Here DataRaker only inputs new conditions into NMS and NMS operators have the option to view/add/delete DataRaker conditions as necessary. If/when subsequent DataRaker input is processed, it will be captured "in addition to" whatever DataRaker conditions were already present within NMS. Ideally, for this use case, NMS operators would delete all (old) DataRaker conditions before processing a new batch of DataRaker conditions. If the operators do not delete the old DataRaker conditions they will tend to accumulate.

This option may be useful if it becomes necessary to leave some DataRaker conditions on the system for a substantial period of time before they are acted on **and** you do not want to automatically remove previously imported DataRaker conditions during every import (like the "SYNCHRONIZE" option does in Use Case 1). Maybe one execution of DataRaker finds conditions of one type and the next iteration finds conditions of another and you do not want to delete the records from the first pass before applying the second (or similar). The format for the input file would be similar to what follows. The primary differences are that there is no SYNCHRONIZE or TYPE keywords and (instead of the directive "syn") we use the "add" action directive.

```
DATA
OBJECT|xfmr_1
 DR_E1|add|WHO=dataraker|TIM=2009-02-27T16:22:17|TXT=Over voltage
 detected|EXT=DR_E1-1
 DR_E1|add|WHO=dataraker|TIM=2009-02-27T17:22:17|TXT=Xfmr within 50%
 of capacity|EXT=DR_E1-2
 DR_E2|add|WHO=dataraker|TIM=2009-02-27T18:22:17|TXT=Xfmr within 75%
 of capacity |EXT=DR_E2-1
```

```
OBJECT|xmfr_2
 DR_E3|add|WHO=dataraker|TIM=2009-02-27T16:22:17|TXT=Xfmr within 100%
 of capacity|EXT=DR_E3-1
 DR_E3|add|WHO=dataraker|TIM=2009-02-27T19:22:17|TXT=Xfmr 120% of
 capacity|EXT=DR_E3-2
END_DATA
```

Use Case 3 – Bulk Delete for NMS Conditions

Use Case 3 can use the same configuration as Use Case 1 other than the format of the input file processed by RTAdapter. In this use case, the RTAdapter input file specifies what conditions to delete from NMS. The creation of this form of input file would need to be done by the NMS project implementers. This option may be useful if an NMS administrator wants to automatically delete some subset of previously applied DataRaker conditions (for whatever reason). The format of the input file is similar to Use Case 2 except that no "TXT=" data is processed. All other fields are processed and can be captured in the NMS data_raker condition table. Note that "add" and "rem" records can also be combined in the same file, but must be specified in proper order ("del" must follow an "add" for same condition, for example).

```
DATA
OBJECT|xfmr_1
 DR_E1|rem|WHO=dataraker|TIM=2009-02-27T16:22:17|EXT=DR_E1-1
 DR_E1|rem|WHO=dataraker|TIM=2009-02-27T17:22:17|EXT=DR_E1-2
 DR_E2|rem|WHO=dataraker|TIM=2009-02-27T18:22:17|EXT=DR_E2-1
OBJECT|xmfr_2
 DR_E3|rem|WHO=dataraker|TIM=2009-02-27T16:22:17|EXT=DR_E3-1
 DR_E3|rem|WHO=dataraker|TIM=2009-02-27T19:22:17|EXT=DR_E3-2
END_DATA
```

Chapter 8

ICCP Adapter

This chapter includes the following topics:

- ICCP Adapter Overview
- Live Energy Connect ICCP Adapter Configuration

ICCP Adapter Overview

The Oracle Utilities Network Management System ICCP Adapter integrates the Oracle Utilities Network Management System with a remote SCADA system through the Inter-Control Center Communications Protocol (ICCP). The Oracle ICCP adapter does not directly speak ICCP, but instead interfaces to a Live Energy Connect 3rd-party ICCP server using proprietary APIs, which then interfaces to the SCADA system that supports the ICCP protocol.

> **Note:** The Oracle ICCP Adapter requires the use of a Live Energy Connect Server that must be separately licensed from Oracle. For additional details on the Live Energy Connect Server, please refer to Live Energy Connect documentation.

ICCP is a standard interface protocol that can be used with Oracle Utilities Network Management System to provide data exchange with remote and local SCADA systems. ICCP is also an international standard: International Electrotechnical Commission (IEC) Telecontrol Application Service Element 2 (TASE.2).

ICCP allows the exchange of real-time and historical power system monitoring and control data, including measured values, scheduling data, energy accounting data, and operator messages. Data exchange can occur between:

- Multiple control center Energy Management System (EMS) systems
- EMS and power plant DCS systems
- EMS and distribution SCADA systems
- EMS and other utility systems
- EMS/SCADA and substations

ICCP Blocks

The ICCP standard consists of the following blocks:

Block	Description	Notes
Block 1	Basic Services	Available via the Oracle Live Energy Connect ICCP Adapter.
Block 2	Extended Data Set Condition Monitoring	Available via the Oracle Live Energy Connect ICCP Adapter.
Block 3	Blocked Transfers	
Block 4	Operator Stations	
Block 5	Device Control	Available via the Oracle Live Energy Connect ICCP Adapter.
Block 6	Programs	
Block 7	Events	
Block 8	Accounts	
Block 9	Time Series	

Live Energy Connect ICCP Adapter Configuration

This section guides the user through configuration of the Oracle Utilities Network Management System Live Energy Connect ICCP Adapter. The following are assumed to be true before the adapter is installed:

- Oracle database access has been confirmed.
- Isis messaging bus has been installed and verified.
- Oracle Utilities Network Management System is installed and functional.
- Live Energy Connect server is installed, functional, and licensed.

The adapter reloads its configuration file and measurements configuration each time connection to Live Energy Connect server is lost.

Configuring the ICCP Adapter requires:

- Configuring the Adapter to Run as a System Service
- Populating the NMS Measurements Tables

Configuring the Adapter to Run as a System Service

Configure the ICCP Adapter by updating the `$NMS_HOME/etc/system.dat` file to include the ICCP Adapter as a system service. There are three main sections where this service needs to be defined: the service, program and instance sections. See the `$NMS_HOME/templates/system.dat.template` file for examples of how to configure the ICCP Adapter. Search for IccpAdapter and make sure those lines are uncommented. You must restart the system services in order for the ICCP Adapter to be properly monitored by SMService.

Below is an example of the program section in the system.dat file:

```
program  IccpAdapter   IccpAdapter  -prm_path /users/nms1/etc/
```

Note: It is assumed that the ICCP Adapter will reside on the same Unix or Linux server where the Oracle Utilities Network Management System services environment resides.

Command Line Options for ICCP Adapter

The command line for the ICCP Adapter provides the following options:

Command Line Option	What it does
-debug <level>	Sets the level of debug messages generated by the adapter. <level> is a positive number, or zero. The higher the number, the more information is displayed. If <level> is omitted, it defaults to a value of 0. Debug facilities can also be specified on the command line; for example: `-debug IA_RTP 3` could be used to specifiy level 3 debug for the IA_RTP debug facility.
-prm_path <IccpAdapter.prm path>	Sets the path of the IccpAdapter.prm parameter file location. This file is used to configure the operation of the ICCP adapter.
`-help`	Returns the available IccpAdapter startup parameters and definitions, then terminates.
-prm_file	Full path and configuration file name. Used to support multiple IccpAdapter instances for a given NMS instance.

IccpAdapter.prm

The IccpAdapter.prm/configuration file is used to configure the operation of the Oracle Utilities Network Management System ICCP Adapter. The default location for this file is the same as where the IccpAdapter binary is located (specifically, `$NMS_BASE/bin`) but it is generally configured to be in a different location by using the `-prm_path <IccpAdapter.prm path>` command line option. Lines in the configuration file beginning with a `";"` (semi-colon) are comments. The -prm_file <full_configuration_path/file> option is useful if you want to run multiple IccpAdapter instances in parallel.Lines beginning with a `"["` (left bracket) are block identifiers (markers). Fields marked as <Required> must be configured for proper operation and are generally site specific. See the IccpAdapter.prm.template file in the standard `$NMS_BASE/templates` directory for an example IccpAdapter configuration file.

Fields in the IccpAdapter.prm File

Field name	Type	Default	Valid Values	Description
[IccpAdapter]	Marker			Used for generic configuration of program.
ServerHostname	IP address List – blank separated	<Required>	128.168.148.43 etc	The IP address(es) of the Live Energy Connect server hostname(s) to connect to. It could be a blank separated list of IP address of several Oracle Live Energy Connect servers. In case a failure of connection was detected by the ICCP Adapter with the current Live Energy Connect server, it will traverse the ServerHostname list for the next Live Energy Connect server to connect to.

Field name	Type	Default	Valid Values	Description
Port	Integer	<Required>	[1..MAX_INT]	Blank separated list of TCP/IP port numbers that the ICCP Adapter will use for a connection attempt to a Live Energy Connect server. Parallel to the ServerHostname, it could be a list of port numbers to use to connect to the corresponding LiveData server in ServerHostname. In case there was a failure of connection with the current Live Energy Connect server, it would proceed to the next entry - in parallel with the next ServerHostname entry. 5002 is typical.
Period	Integer	10	[1..MAX_INT]	Time in seconds between periodic transfers of non-time critical data.
StatusUpdates	Integer	25	[1..MAX_INT]	The maximum number of status updates to be sent to DDService at one time.
ScadaId	Integer	1	[1..MAX_INT]	Identification number assigned to the SCADA in Oracle Utilities Network Management System with which the ICCP Adapter is communicating.
AnalogTolerance	Double	0.0F	[0.01..0.99]	Dead band for analog value updates. It is the required percent change from the last reported value to trigger an update.
Analogs	Boolean	F	[T, F]	Boolean value indicating use of the ANALOG_MEASUREMENTS table.
Digitals	Boolean	T	[T, F]	Boolean value indicating use of the DIGITAL_MEASUREMENTS table.
ReconnectPeriod	Integer	60	[0..MAX_INT]	Configurable duration of delay to wait after the Live Energy Connect server instances failed in succession.
Controls	Boolean	F	[T, F]	Boolean value indicating use of the controls table for Block 5 functionality.
QualityCodeUseOn AssociationTimeOut	Integer	0	[0..MAX_INT]	Quality code that will be sent to DDService when the communication with LD server is lost. A valid QualityCode must be specified if this option is used.
DisableStop	Boolean	F	[T, F]	Normally the adapter will accept and process a stop high level message. This option disables this feature. When this feature is enabled, the adapter will disregard a stop high level message.
DisableCOV	Boolean	F	[T, F]	Normally the adapter will process a COV update (one or more open and close sequences within a scan cycle – normally indicating one or more momentaries) and send it to DDService. This option disables this feature.
Vccs	Integer	<Required>	[1..MAX_INT]	The number of VCCs (Virtual Control Centers) that are configured in the Live Energy Connect server.

Field name	Type	Default	Valid Values	Description
IgnoreCritInterSysServFail	Boolean	F	[T, F]	Normally the adapter will stop if SMSserivce reports a critical service failure and not restart until services are recovered. This option disables this feature.
NoSwitchOpQualityMask	Integer	No Mask	[0..MAX_INT]	This parameter sets the quality codes that prevent switches from being operated. There is no effect on non-switch statuses.
PhaseEncodeSwitch	Boolean	F	[T, F]	If set to true, this will enable Iccp Adapter to interpret data discrete values as three-bit phase encoded statuses. [e.g., A = '001', B = '010', C = '100', etc.]
PseudoAlarms	Boolean	F	[T, F]	If set to 1, then this will set the pseudo flag for the switch entry to be sent to DDService. Generates pseudo (advisory) alarms for ICCP reported device ops rather than actually operating the switches in the Oracle Utilities Network Management System model.
SendTimeout	Integer	10	[0..MAX_INT]	Number of seconds to wait when attempting to connect ICCP Adapter to the Live Energy Connect server. If no connection is received, it will move to the next available Live Energy Connect server (if configured). Generally leave as the default.
DetachRead	Boolean	T	[T,F]	Detach the IccpAdapter internal thread that is reading the incoming RTP data stream from Isis. Generally leave as the default.
DetachWrite	Boolean	F	[T,F]	Detach the IccpAdapter internal thread that is writing the outgoing RTP data stream from Isis. Generally leave as the default
DetachHeartbeat	Boolean	F	[T,F]	Detach the IccpAdapter internal thread that is sending outgoing RTP data stream heartbeat requests from Isis. Generally leave as the default
[VCC#]	Marker			E.g., [VCC1]. Provides additional information for each VCC (Virtual Control Center).
AssociationAddress	Integer	<Required>	[1..MAX_INT]	RTP address in Live Energy Connect server for watching and controlling this VCCs association status
TransferSetAddress	Integer	<Required>	[1..MAX_INT]	RTP address in Live Energy Connect server for controlling the use of configured ICCP transfer sets

Field name	Type	Default	Valid Values	Description
NumTransferSets	Integer	<Required>	[1..MAX_INT]	The total number of transfer sets that are available for use in the VCC. Number must be a multiple of 16.
AssociationName	String	Vcc Label	[a..z, A..Z, 0..9]	The name of the ICCP Association.
AssociationRestartTime	Integer	30	[1..MAX_INT]	Seconds allowed for restart before the association is considered failed.
TransferSetRestartPeriod	Integer	30	[1..MAX_INT]	Seconds allowed to restart transferset before the restart is considered failed and no additional restart attempts will be made.
TransferSetFailCountReset	Integer	60	[1..MAX_INT]	The number of fail count to be exhausted before marking the transfer set as not alive.
MaxTransferSetRestarts	Integer	10	[1..MAX_INT]	Maximum number of restart for transfer set.
TransferSetControlMask	String	<Required>	[T, F]	Transfer set control mask for the transfer set to be sent to Live Energy Connect server. One T/F flag for each TransferSet. String length must be a multiple of 16. Example with one TransferSet enabled: "FTTTTTTTTTTTTTTT"
[ValidityQuality]	Marker			Assign an Oracle Utilities Network Management System quality to ICCP Validity Quality values
Valid	Integer	0	2**n (n=11->31)	The value is valid. This is the default (normal) value should virtually always be 0.
Held	Integer	0	2**n (n=11->31)	Previous data value has been held over. Interpretation is local.
Suspect	Integer	0	2**n (n=11->31)	Data value is questionable. Interpretation is local.
Notvalid	Integer	0	2**n (n=11->31)	The value is not valid.
[CurrentSourceQuality]	Marker			Assign an Oracle Utilities Network Management System quality to ICCP Current Source Quality values.
Telemetered	Integer	0	2**n (n=11->31)	Value was received from a telemetered site. This is the default (normal) value should virtually always be 0.
Calculated	Integer	0	2**n (n=11->31)	Value was calculated based on other data.
Entered	Integer	0	2**n (n=11->31)	Value was entered manually.
Estimated	Integer	0	2**n (n=11->31)	Value was estimated (State Estimator, etc.).
[NormalValueQuality]	Marker			Assign an Oracle Utilities Network Management System quality to ICCP Normal Value Quality values.
Normal	Integer	0	2**n (n=11->31)	The point value is that which has been configured as normal for the point. This is the default (normal) value should virtually always be 0.

Field name	Type	Default	Valid Values	Description
Abnormal	Integer	0	2**n (n=11->31)	The point value is *not* that which has been configured as normal for the point.
[TimeStampQuality]	Marker			Assign an Oracle Utilities Network Management System quality to ICCP Timestamp Quality values
Valid	Integer	0	2**n (n=11->31)	Current value of the TimeStamp attribute contains the time stamp of when the value was last changed. This is the default (normal) value should virtually always be 0.
Invalid	Integer	0	2**n (n=1->31)	Current value of the TimeStamp attribute contains the time stamp other than when the value was last changed.
[SwitchStatusQuality]	Marker			Assign an Oracle Utilties Network Management System quality to the non-open/close statuses that can be returned in the two-bit ICCP status field. ICCP "open" is generally (1) and "closed" is (2).
Between	Integer	262144	2**n (n=11->31)	Quality code to set if the two bit ICCP switch status is reported as "between" (0).
Invalid	Integer	524288	2**n (n=11->31)	Quality code to set if the two bit ICCP switch status is reported as "invalid" (3).

Quality Codes

The IccpAdapter.prm file enables ICCP quality codes to be translated into Oracle Utilities Network Management System quality codes. In the simplest (and default) configuration, all of the ICCP quality codes (except the `Between` and `Invalid SwitchStatusQuality` codes, which need to be defined to ensure proper operation) are assigned to the 'normal' Oracle Utilities Network Management System quality code (0).

> **Note**: Oracle Utilities Network Management System quality codes are always single bit values. Therefore, the only valid value for configuration is 0 or a proper value of 2^nth power where n=0->31. The Quality Rules Table on page 8-16 table lists all the valid user-defined quality codes in Oracle Utilities Network Management System.

If none of the predefined quality codes are applicable, then a new code must be created. The following steps accomplish this:

- Choose an ICCP quality listed in the IccpAdapter.prm.
- Check the Quality Rules Table to see which values have already been assigned to qualities.
- Assign one of the values listed below to the ICCP quality and enter it in the Quality Rules Table.
- Locate the quality in the IccpAdapter.prm file and enter the assigned value for it.

The assigned value must be the decimal representation of 32 bits, where no more than one bit has a value of 1. For example, if the bit position is 16, use the number 65536. The following list contains the decimal values that may be assigned to new qualities: 65536, 131072, 262144, 524288, 1048576, 2097152, 4194304, 8388608, 16777216, 33554432, 67108864, 134217728, 268435456, 536870912, 1073741824, 2147483648.

Values of 0, 1, 2, 4, 8, 16, 32, 64, 128, 256, 512, 1024, 2048, 4096, 8192, 16384, 32768 may not be assigned as codes for new qualities because they are already defined and used within Oracle Utilities Network Management System. The 'normal' Oracle Utilities Network Management System quality code is 0.

The adapter reads the IccpAdapter.prm file only during startup. If the quality code is added when the adapter is running, you must restart the adapter in order for it to recognize the new quality code.

High Level Messages

The ICCP Adapter can be dynamically controlled from Oracle Utilities Network Management System by using high-level messages. They can be used any time while running the Oracle Utilities Network Management System ICCP Adapter. The following high-level messages can be used:

- `stop`

  Disconnect from the Live Energy Connect server and stop the Oracle Utilities Network Management System ICCP Adapter.

- `report`

  Empty message to determine how many Oracle Utilities Network Management System ICCP Adapters are running.

- `debug [on | off | #]`

  Turn on/off debug, or set it to a specific level. On is equivalent to 1, off is 0. Level can be any integer value no less than 0.

- `debug <facility> #`

  Turn facility specific debug on/off. For example, to turn IA_RTP debug on to level 3:

  ```
  Action any.IccpAdapter debug IA_RTP 3
  ```

  To turn off:

  ```
  Action any.IccpAdapter debug IA_RTP 0
  ```

  Check ICCP Adapter specific log file for other facilities specific to this adapter process.

- `demote`

  Causes the Oracle Utilities Network Management System ICCP Adapter currently in control to relinquish control.

Use IccpAdapterService with high-level messages for the Oracle Utilities Network Management System ICCP Adapter. For example:

```
Action any.IccpAdapter report
```

Populating the NMS Measurements Tables

ICCP points must first be mapped to devices in the Oracle Utilities Network Management System model before sending SCADA updates to Oracle Utilities Network Management System. These ICCP points are placed in *SCADA Measurements* table of the Oracle Utilities Network Management System database. A process needs to be formalized to create and maintain this data. This process often depends on customer specific mechanisms used to maintain the SCADA side of the ICCP interface. As a result this process generally needs to be formalized by Live Energy Connect and the customer - potentially with help from NMS consulting.

Required NMS Data from Oracle Live Energy Connect

The following data items are required to be populated in the NMS measurements tables:

- ICCP Name
- ICCP Type
- Attribute
- NMSDeviceID

ICCP Name

- ICCP Name has to be unique.
- It is recommended for the name to be composed of alpha-numeric characters and underscore
- It is recommended for the first character of the ICCP Name to be a letter
- There should be no space, no periods and no dashes in the ICCP name.

ICCP Type

Below is a list of supported ICCP Types. Please take note of the underscore.

- Data_State
- Data_StateQ
- Data_StateQTimeTag
- Data_StateExtended
- Data_Real
- Data_RealQ
- Data_RealQTimeTag
- Data_RealExtended
- Data_Discrete
- Data_DiscreteQTimeTag
- Data_DiscreteExtended

Attribute

- The attribute should have a corresponding entry in the ATTRIBUTES table, specifically, in the NAME field in the Oracle Utilities Network Management System database. Take note that entries under the attributes column of the flat file needs to exactly match the entries in the NAME field of the ATTRIBUTES table, taking into consideration case sensitivity, underscores, etc.

NMSDeviceID

- This is the ID of the SCADA device. This ID should match a unique attribute or device name in NMS that will allow the measurement table population process to grab the appropriate NMS device handle (h_cls and h_idx) of the SCADA device. Tables that could be used in NMS to reference SCADA devices handles could be SCADA_POINTS, ALIAS_MAPPING, or a model managed device attribute table such as ATT_SWITCH.

Information Model - Database Schema

Quality Rules Table

This database table will define the quality codes that may be used for analog and digital values. This table defines the meaning of each bit in the quality codes for SCADA measurements.

Column Name	Data Type	Size	Description	Values
PRIORITY	NUMBER		Ranking priority of the quality code	Priority code, specifies relative importance of this quality bit over other quality bits

Column Name	Data Type	Size	Description	Values
VALUE	NUMBER		Bit value used for the quality code change.	For Phase 1: 2048=No Data 4096=Old Data
STRING	VARCHAR2	3	Description of the quality code, which is displayed next to the value of the measurement when a quality exists for a measurement change.	The actual character string displayed next to the device when viewed via the Viewer
DESCRIPTION	VARCHAR2	128	Descriptive string	Any text string-usually the action taken from the SCADA Summary
COLOR	NUMBER		Designates which color is used in the Viewer to display the measurement when a particular quality bit is set. Integer value for the color associated to the quality code change to be displayed	The integers are mapped to the pre-allocated colors documented in separate application file.
LOCATION	NUMBER		Location of symbol in relation to the device associated with the value. only used if a symbol is defined for the quality code as opposed to just a color for a quality change	1-9; 5 overrides the device symbol
SYMBOL	NUMBER		The symbol used to display the value. only used if a symbol is defined for the quality code as opposed to just a color for a quality change	Valid Symbol Identification Number defined in <project>_SYMBOLS.sym. 0 if defining a text symbol.
OFF_NOMINAL	VARCHAR2	1	Whether or not the value is off-nominal	Y or N

Note: If multiple bits in the quality code are set, then the color of the measurement text in the Viewer is determined by the color of the lowest order bit that is set in the quality code.

SCADA Measurements Table

The SCADA_MEASUREMENTS_ST table defines digital and analog measurements as used by Oracle Utilities Network Management System. It is a staging table used by DDService for populating the production SCADA measurements tables (ANALOG_MEASUREMENTS and DIGITAL_MEASUREMENTS).

The Oracle Utilities Network Management System ICCP Adapter communicates dynamic information to the Oracle Utilities Network Management System services. The services will cache measurements defined by this table. Population is dependent upon customer-supplied information.

Column Name	Data Type	Size	Description	Values
MEASUREMENT_TYPE	VARCHAR2	1	Measurement type code.	A (analog) D (digital)
H_CLS	NUMBER		Class component of handle	Valid object class
H_IDX	NUMBER		Index component of handle	>0
PARTITION	NUMBER		Partition number, index component of partition handle	Valid partition or 0 for multi-partition objects
ATTRIBUTE	NUMBER		Attribute number which identifies measurement type	Valid attribute number
TTL	NUMBER		Setting for displaying measurement value in the Viewer or not.	1 or 0. 1=yes
LIMIT_GROUP_ID	NUMBER		Limit group ID	Customer defined
RTI_ALIAS	VARCHAR2	128	Alias to be used in communications between the Oracle Utilities Network Management System ICCP Adapter and Oracle Live Energy Connect server	Alphanumeric
SCADA_ID	NUMBER		SCADA host ID	0 (not a SCADA device), 1 (SCADA 1), 2 (SCADA 2)...
RTU_ID	VARCHAR2	32	SCADA RTU ID	String (optional)
QUALITY	NUMBER		Measurement quality code	Bit mask of quality codes
VALUE	NUMBER		Measurement/entered value	Entered value
UPDATE_FLAG	NUMBER		Manual replace flag	1=true, 0=false
ICCP_OBJECT	VARCHAR2	32	ICCP Object type of the telemetered value	Alphanumeric
DISPLAY_ID	VARCHAR2	64		
NORMAL_STATE	NUMBER			
CONTROLLABLE	VARCHAR2	1		

Column Name	Data Type	Size	Description	Values
ACTIVE	VARCHAR2	1	Active flag for patch management, indicates whether the row is active within the model	Y(yes=active), N(no=inactive), A(local add=active), D(localdelete=inactive), R(locally removed, dependent=inactive)
SOURCE	VARCHAR2	33	Source of the measurement.	any character string.
OFF_NOMINAL_TIME	DATE			

SCADA Controls Table

The SCADA_CONTROLS table defines control actions as used by Oracle Utilities Network Management System. Population is dependent upon customer-supplied information. Population of the scada_controls table is typically accomplished by first populating the scada_controls_st (staging table). The scada_controls_st staging table is populated via a product or project specific process. Once the staging table is populated running the `UpdateDDS -recacheMeasures` command, DDService will be asked to replace the run-time scada_controls table with the contents of the scada_controls_st staging table and reload any internal scada_controls caches.

Column Name	Data Type	Size	Description	Values
H_CLS	NUMBER		Class component of device handle.	Valid object class
H_IDX	NUMBER		Index component of device handle.	>0
NMS_ACTION	NUMBER		The Control Action ID number associated to the action.	Valid control action ID. 1 (OPEN), 2 (CLOSE)…
EXT_ACTION	NUMBER		Part of unique key to identify each external control action for a single device.	0..N, based on the number of control actions defined for the device.
ATTRIBUTE	NUMBER		If non-zero, attribute number which identifies measurement type.	0 (Ignore) or Valid attribute number
RTI_ALIAS	VARCHAR2	128	Alias to be used in communications between the Oracle Utilities Network Management System ICCP Adapter and Oracle Live Energy Connect server.	Alphanumeric
TIMEOUT	NUMBER		SCADA timeout for this device.	0 = No Timeout, >0 = timeout is seconds.
SCADA_ID	NUMBER		SCADA server ID.	0 (not a SCADA device), 1 (SCADA 1), 2 (SCADA 2)...
RTU_ID	VARCHAR2	64	SCADA RTU ID.	String (optional)

Column Name	Data Type	Size	Description	Values
ACTIVE	VARCHAR2	1	Active flag for patch management; indicates whether the row is active within the model.	Y (yes=active), N (no=inactive), A (local add=active), D (local delete=inactive), R (locally removed, dependent=inactive)
PARTITION	NUMBER		NMS partition number	numeric
FEEDER	VARCHAR2	100	Nominal Feeder (optional)	
SUBSTATION	VARCHAR2	100	Nominal Substation (optional)	
GANG	VARCHAR2	1	Is this a gang operated device (optional)	Y N

Populating the NMS Measurements Tables

ICCP points must first be mapped to devices in the Oracle Utilities Network Management System model before sending SCADA updates to Oracle Utilities Network Management System. These ICCP points are placed in *SCADA_MEASUREMENTS_ST* table of the Oracle Utilities Network Management System database. A process needs to be formalized to create and maintain this data. This process often depends on customer specific mechanisms used to maintain the SCADA side of the ICCP interface.

Required NMS Data

The following data items are required to be populated in the NMS measurements tables:

- ICCP Point Name
- Attribute
- SCADA ID
- NMS Device Handle
- Measurement Type
- ICCP Data Set
- ICCP Data Type

ICCP Point Name

- ICCP Point Name has to be unique.
- It is recommended for the name to be composed of alpha-numeric characters and underscore
- It is recommended for the first character of the ICCP Name to be a letter
- There should be no space, no periods and no dashes in the ICCP name.

Attribute

- The attribute value connects a SCADA measurement to a specific device attribute in NMS. The attribute should have a corresponding entry in the ATTRIBUTES table.

SCADA ID

- SCADA system identifier. There should be a corresponding entry in the SCADA_IDS table.

NMS Device Handle

- The NMS Device Handle is the handle of the device in the NMS model associated with a particular ICCP Point. A single NMS device can have multiple ICCP points associated with it for different measurements that the SCADA system provides for the given device.

Measurement Type

- Each ICCP point represents either digital (including device status) or analog measurement.

ICCP Data Set

- The name of the data set this point is assigned to. Points assigned to the same data set share the same data transfer configuration (report by exception, integrity check, etc). There can be a limit on how many points can be assigned to a single data set. Consult your ICCP server documentation.

ICCP Data Type

- Each ICCP point has an associated data type. If data type is not specified for a point then the following defaults are used:

  Device status - Data_StateExtended

  Digital value - Data_DiscreteQ

  Analog value - Data_RealQ

Information Model - Database Schema

Quality Rules Table

This database table will define the quality codes that may be used for analog and digital values. This table defines the meaning of each bit in the quality codes for SCADA measurements.

Column Name	Data Type	Size	Description	Values
PRIORITY	NUMBER		Ranking priority of the quality code	Priority code, specifies relative importance of this quality bit over other quality bits
VALUE	NUMBER		Bit value used for the quality code change.	For Phase 1: 2048=No Data 4096=Old Data
STRING	VARCHAR2	3	Description of the quality code, which is displayed next to the value of the measurement when a quality exists for a measurement change.	The actual character string displayed next to the device when viewed via the Viewer

Column Name	Data Type	Size	Description	Values
DESCRIPTION	VARCHAR2	128	Descriptive string	Any text string-usually the action taken from the SCADA Summary
COLOR	NUMBER		Designates which color is used in the Viewer to display the measurement when a particular quality bit is set. Integer value for the color associated to the quality code change to be displayed	The integers are mapped to the pre-allocated colors documented in separate application file.
LOCATION	NUMBER		Location of symbol in relation to the device associated with the value. only used if a symbol is defined for the quality code as opposed to just a color for a quality change	1-9; 5 overrides the device symbol
SYMBOL	NUMBER		The symbol used to display the value. only used if a symbol is defined for the quality code as opposed to just a color for a quality change	Valid Symbol Identification Number defined in <project>_SYMBOLS.sym. 0 if defining a text symbol.
OFF_NOMINAL	VARCHAR2	1	Whether or not the value is off-nominal	Y or N

Note: If multiple bits in the quality code are set, then the color of the measurement text in the Viewer is determined by the color of the lowest order bit that is set in the quality code.

SCADA Measurements Table

The SCADA_MEASUREMENTS_ST table defines digital and analog measurements as used by Oracle Utilities Network Management System. It is a staging table used by DDService for populating the production SCADA measurements tables (ANALOG_MEASUREMENTS and DIGITAL_MEASUREMENTS).

The Oracle Utilities Network Management System ICCP Adapter communicates dynamic information to the Oracle Utilities Network Management System services. The services will cache measurements defined by this table. Population is dependent upon customer-supplied information.

Column Name	Data Type	Size	Description	Values
MEASUREMENT_TYPE	VARCHAR2	1	Measurement type code.	A (analog) D (digital)
H_CLS	NUMBER		Class component of handle	Valid object class
H_IDX	NUMBER		Index component of handle	>0
PARTITION	NUMBER		Partition number, index component of partition handle	Valid partition or 0 for multi-partition objects
ATTRIBUTE	NUMBER		Attribute number which identifies measurement type	Valid attribute number
TTL	NUMBER		Setting for displaying measurement value in the Viewer or not.	1 or 0. 1=yes
LIMIT_GROUP_ID	NUMBER		Limit group ID	Customer defined
RTI_ALIAS	VARCHAR2	128	ICCP Point Name	Alphanumeric
SCADA_ID	NUMBER		SCADA host ID	Foreign key into SCADA_IDS database table.
RTU_ID	VARCHAR2	32	SCADA RTU ID	String (optional)
QUALITY	NUMBER		Measurement quality code	Bit mask of quality codes
VALUE	NUMBER		Measurement/entered value	Entered value
UPDATE_FLAG	NUMBER		Manual replace flag	1=true, 0=false

Column Name	Data Type	Size	Description	Values
ICCP_OBJECT	VARCHAR2	32	ICCP data type for this measurement	List of the supported ICCP data types: Data_Discrete Data_DiscreteQ Data_DiscreteQTimeTag Data_DiscreteExtended Data_Real Data_RealQ Data_RealQTimeTag Data_RealExtended Data_StateQ Data_StateQTimeTag Data_StateExtended
ICCP_DATA_SET	VARCHAR2	64	Name of the ICCP data set this measurement is assigned to.	String
DISPLAY_ID	VARCHAR2	64		
NORMAL_STATE	NUMBER			
CONTROLLABLE	VARCHAR2	1		
ACTIVE	VARCHAR2	1	Active flag for patch management, indicates whether the row is active within the model	Y(yes=active), N(no=inactive), A(local add=active), D(localdelete=inactive), R(locally removed, dependent=inactive)
SOURCE	VARCHAR2	33	Source of the measurement.	any character string.
OFF_NOMINAL_TIME	DATE			

SCADA_IDS

SCADA_IDS contains information about known SCADA systems that NMS is connected to.

Column Name	Data Type	Size	Description	Values
ID	NUMBER		SCADA system id	
SCADA_NAME	VARCHAR2	32	SCADA system name	
ADAPTER_TYPE	VARCHAR2	32	Adapter used to communicate with the SCADA system	MULTISPEAK (MultiSpeak SCADA Adapter) RTADAPTER (Generic SCADA Adapter) ICCP (ICCP Adapter)
ACTIVE	VARCHAR2	1	Active flag	Y - active N - inactive

Chapter 9

Specific SCADA Adapters

This chapter includes the following topics:

- OSI SCADA Adapter

OSI SCADA Adapter

The OSI SCADA Adapter requires the **scada_osi** license in your `<project>_licensed_products.dat` file. Example configuration for the OSI SCADA Adapter is found in the multispeak_scada_config.sql template file. It includes the following concepts:

- General Configuration Parameters
- Point List Configuration
- Real-Time States/Values
- Tags

General Configuration Parameters

The SCADA_LINKS table requires that the MultiSpeak SCADA Server URL be configured. For example:

```
INSERT INTO scada_links (id, scada_id, ws_url, priority, active)
VALUES (1, 200, 'http://osi-scada-server:8080/axis2/services/
MultiSpeak_v41_SCADA_Server', 1, 'Y');
```

The CES_PARAMETERS SoapUI.plugin_class should be the OSI MultiSpeak plug-in class. For example:

```
INSERT INTO ces_parameters (app, attrib, value)
VALUES ('SCADAInterface', 'SoapUI.plugin_class',
'com.splwg.oms.interfaces.scada.plugins.OsiScada');
```

Point List Configuration

Oracle NMS defines a set of measurement points (status and analog) that NMS is interested in "sharing" with OSI. When a point is shared between the two systems, the following functionality is automatically enabled:

Data Flow	Real Time Values/ Qualities	Controls	Tags	Quality Codes	UI Navigation
NMS—OSI	N/A	Status (Open/ Close)	Yes - Status	No	Yes
OSI—NMS	Status/ Analog/ Digital	N/A	Yes - Status	Yes	Yes

The naming of these points is based upon a mutually agreed upon convention. This convention aligns how measurement points are defined in NMS with how those same points are defined in the OSI D-SCADA. The point ID is referred to as the common "Point ID," and is the basis for all data exchange between the two systems. Note the only lack of point ID symmetry involves non-gang 3-phase devices. In the NMS model all devices can be one, two or three phase and whether a device is gang or non-gang operated is a device attribute. NMS "Status" is represented by a 3-bit integer (0 - 7), as follows:

- 0 = phase ABC open
- 1 = phase A closed
- 2 = phase B closed
- 4 = phase C closed
- 3 = phase AB closed
- 5 = phase AC closed
- 6 = phase BC closed
- 7 = phase ABC closed

In OSI D-SCADA, all "Status" points are binary, so this adapter must map a single (3-phase) NMS Status to three different OSI "Status" measurements. The following is an overview of the proposed naming convention for these points:

NMS Point Type	NMS Point ID	OSI Point Type	OSI Point ID	NMS Device Name	Measurement Description
Status	BR2412	Status	BR2412	BR2412	3-phase ganged breaker state.
Status	S1234	Status	S1234^^A S1234^^B S1234^^C	S1234	3-phase non-ganged switch state.
Digital	BR2412^Auto	Status	BR2412^Auto	BR2412	Auto Reclose status for BR2412.

NMS Point Type	NMS Point ID	OSI Point Type	OSI Point ID	NMS Device Name	Measurement Description
Analog	BR2412^Amps_A BR2412^Amps_B BR2412^Amps_C	Analog	BR2412^Amps_A BR2412^Amps_B BR2412^Amps_C	BR2412	3-phase ganged breaker current measurement (in Amps).
Analog	S3113^fault_kv_a S3113^fault_kv_b S3113^fault_kv_c	Analog	S3113^fault_kv_a S3113^fault_kv_b S3113^fault_kv_c	S3113	3-phase non-ganged switch fault voltage (in kV).

There is some flexibility regarding how this common Point ID is defined in the D-SCADA system. For example, the OSI SCADA point "Name" field could be used to store the common ID used by Oracle NMS, or a combination of OSI SCADA fields could also be used. This allows for an "automatic" mapping to telemetry in the OSI system without the user having to maintain a separate mapping table.

The OSI D-SCADA system can be configured to periodically perform this synchronization with Oracle NMS.

Real-Time States/Values

OSI provides a one-way notification of changes to subscribed status and analog points, as defined by the Oracle NMS shared point list. Attributes included in this payload include state/value, quality, trip count (for status), and time stamp. In the case of quality, a set of quality types has been agreed upon for the lexicon used between the Oracle NMS and OSI systems (see table below), with each system mapping their internal quality types to these intermediate qualities. The lexicon used is limited to the qualities supported in the MultiSpeak v4.1 standard, which includes Measured, Default, Estimated, Calculated, Initial, Last, and Failed.

MultiSpeak Quality	Description
Measured	Default quality for any OSI D-SCADA telemetered points.
Calculated	Default quality for any calculated (*i.e.*, OSI "C_*") D-SCADA points.
Last	Indicates presence of a Scan Inhibit tag on the OSI D-SCADA point.
Failed	Indicates non-update quality on the OSI D-SCADA point.

A change in any of the attributes that make up the point will trigger an immediate notification to the NMS with all of the current attributes for that point within 5 seconds from when the change occurred.

In addition to the change-based notification, NMS will retrieve all of the status and analog point data from OSI when it first initializes or when NMS has detected that the OSI system has recovered from an event that could have caused change-based notifications to be missed (for example, system failover, database build, and so forth).

Tags

OSI D-SCADA and Oracle NMS bi-directionally exchange tags for NMS Status points included in the shared common Point ID list (tags are not exchanged for NMS Digital or NMS Analog measurement points). To avoid conflicts, tags created in the NMS can only be edited/deleted in the NMS system while tags created in the OSI D-SCADA system can only be edited/deleted in the SCADA system. Note that a user in either system can temporarily edit/delete a "foreign" tag originating from the other system, but it will be overwritten when a periodic "integrity" sync occurs. Similar to qualities, a lexicon of tag types has been established (see table below) that maps any vendor-specific tags on either side to one of the common tag types. The base tags supported by the adapter are listed in the table below; other tags can be added via project-specific configuration.

OSI Tag	NMS Tag	OSI—NMS Tag Type	NMS—OSI Tag Type
Information (F)	Information	SCADA_info	NMS_info
Control Inhibit (C)	Tag	SCADA_inhibit	NMS_inhibit
Close Inhibit (!)	Hold	SCADA_close_inhibit	NMS_close_inhibit

Similar to the point state/value exchange, this interface will be change-based with an integrity poll service available on the OSI side for NMS to retrieve OSI tags for all shared status points and vice versa for OSI to retrieve from NMS. A *CRUD*-style interface (Create/Read/Update/Delete) will be provided by each side. Only tags on common Point IDs in the shared list will be included in this interface.

Controls

The Oracle NMS to OSI D-SCADA integration can also be configured to allow NMS control requests to originate within NMS and be passed to OSI D-SCADA to send to the field. When NMS is configured to do so an NMS "Instruct" action is generally recorded on the NMS side to track specific NMS control requests to the OSI D-SCADA. If/when the OSI D-SCADA receives the request it will validate and process as if the request came from OSI D-SCADA itself. If the requested action is successful the associated SCADA integration should capture the impact of the request and send back to NMS (device opened - for example). Once NMS sees confirmation from the OSI D-SCADA that the request was performed it will remove the NMS "Instruct" condition.

Simulation

For non-production Oracle NMS to OSI D-SCADA instances it is often desirable show how the SCADA integration might work in an actual production installation (for example, for training). One of the more significant issues surrounding this type of simulation revolves around what analog values OSI D-SCADA should send to NMS. Since OSI D-SCADA is not hooked to actual devices in the field it cannot represent actual field conditions.

If the Oracle NMS/DMS modules (with the NMS Dispatcher Training Simulator) are in play (licensed and configured) than there is an option that can help alleviate the problem of what analogs OSI D-SCADA should send to Oracle NMS. Essentially the Oracle NMS Training Simulator already tries to predict the load impact when operating various switches within the Oracle NMS model. Mechanisms exist that allow those predicted loads to be sent to the OSI D-SCADA where OSI D-SCADA can send them back to Oracle NMS as if they came from the field. This will require some project work, but the `osiAnaSym` script is provided as an

example of how to propagate Oracle NMS values to OSI D-SCADA. The nms-osi-ana-sim script can be used to help manage an Oracle NMS daemon process via Oracle NMS SMService. Contact your Oracle project deployment team and/or Oracle support for more information.

Navigation

It is possible to support direct Oracle NMS Java client navigation to/from an OSI D-SCADA client. This is handled outside of the MultiSpeak adapter - via a pair of named pipes on the workstation supporting both the Oracle NMS Java Swing client and the OSI D-SCADA client. Set up/configuration for this type of navigation is project specific and beyond the scope of this document. It is merely mentioned here. Contact your Oracle project deployment team and/or Oracle support for more information.

Chapter 10

SCADA Calculation Engine

This chapter includes the following topics:

- Introduction
- SCADA Calculation Engine Database Configuration
- SCADA Calculation Engine SRS Rules Configuration

Introduction

The Oracle Utilities Network Management System SCADA Calculation Engine generates calculated point values based on measurements received from any supported SCADA Adapter. These measurement values, which are fully configurable using SQL procedures, are fed into the system using the **RTDBAdapter** (RTAdapter with the -dir RDBMS option).

The executable program (**CalcAdapter**) can be configured in the system.dat file.

SCADA Calculation Engine Database Configuration

The `SCADA_CALC_FUNC` table holds the calculation engine configuration mapping. Insert into this table the specific rti_alias point names and functions to call for each mapping needed. Alternately, if your rti_alias point names follow the standard <device_alias>-<attribute name> convention, you can use `[ALL]`, which creates this mapping for every device that has these measurements.

Column	Description
seq_id	The generated primary key from the scada_calc_seq sequence.
rti_alias	The point name to update.
unc_name	The function to call. NMS provides many examples in the scadacalc package.
func_args	The arguments to the function. Put single quotes around strings, like point names.

Examples

1. This multiplies the BR2411-kv_A by 1000 and puts it in the BR2411-v_A point, using the provided multiply_value() function:

   ```
   INSERT INTO scada_calc_func (seq_id, rti_alias, func_name,
   func_args)
   VALUES( scada_calc_seq.nextval, 'BR2411-v_A',
   'scadacalc.multiply_value','''BR2411-kv_A'', 1000' );
   ```

2. This averages the by-phase BR2411-Amps_A, BR2411-Amps_B, and BR2411-Amps_C measurements and puts the result in the BR2411-Amps point, using the provided avg_3() function:

   ```
   INSERT INTO scada_calc_func (seq_id, rti_alias, func_name,
   func_args)
   VALUES(scada_calc_seq.nextval,'BR2411-Amps','scadacalc.avg_3',
   '''BR2411-Amps_A'',''BR2411-Amps_B'',''BR2411-Amps_C''' );
   ```

3. This sums all Amps_A + Amps_B + Amps_C to the Amps_Sum measurement for every device that contains those measurements. All measurement rti_aliases must have the same prefix (usually the alias), and the suffixes must match the attribute names. This uses the provided sum_3() function:

   ```
   INSERT INTO scada_calc_func (seq_id, rti_alias, func_name,
   func_args)
   VALUES( scada_calc_seq.nextval, '[ALL]-Amps_Sum',
   'scadacalc.sum_3', '''[ALL]-Amps_A'',''[ALL]-Amps_B'',''[ALL]-
   Amps_C''' );
   ```

A large set of functions are already available in the scadacalc package, but others can be defined by the project team, if needed.

Notes on adding new procedures:

- Follow the convention that the first parameter is the resulting rti_alias name.
- Be sure method names are unique. Add the number of arguments, analog or digital, *etc.* to make the names unique.
- Use the existing scadacalc procedures as a guide and reuse the `get_analog()`, `get_digital()`, `insert_analog()`, `insert_digital()` functions.

SCADA Calculation Engine SRS Rules Configuration

The interval used by the calculation engine is configurable in the `scadaCalcInterval` SRS Rule. This interval defaults to 5 seconds and controls how many seconds the SCADA calculation engine wait to buffer reading before triggering the configured procedures.

Chapter 11

MultiSpeak Adapter

This chapter includes the following topics:

- Introduction
- Installation
- Software Configuration
- Adapter Interface Communication Overview
- Adapter Design
- Database Schema
- SCADA Component
- Supported Data Flows
- Software Configuration
- Plugin Support
- High-Level Messages
- Troubleshooting
- Security Best Practices

Introduction

The Oracle Utilities Network Management System MultiSpeak Adapter provides the ability to request and receive meter status information from an Automated Meter Reading (AMR) system, to receive crew location information from an Automated Vehicle Location (AVL) system, and to communicate with SCADA systems. The interface uses communication protocols as defined in MultiSpeak Version 4.1 Web Services specification. (SOAP protocol version 1.1 is used unless otherwise noted.) HTTP/HTTPS protocol is used as transport mechanism. It allows Oracle Utilities Network Management System to communicate securely with any MultiSpeak-compliant AMR, AVL, or SCADA system. In addition to HTTP/HTTPS, communication can be done over JMS.

The Oracle Utilities Network Management System MultiSpeak Adapter is implemented as a Java application, running on the Oracle WebLogic Server platform. The URL for accessing web services deployed by the Oracle Utilities Network Management System MultiSpeak Adapter differs depending on the SOAP version that is used by the client.

SOAP Version	URL
1.1	https://<host name>:<port>/nms-ms/oa
1.2	https://<host name>:<port>/nms-ms/oa12

Please read through this chapter thoroughly before beginning your product installation.

Installation

- Installation Overview
- Adapter Installation Instructions for Oracle WebLogic Server
- JMS Transport Mechanism

> **Note**: The installation instructions that follow assume that the Oracle Utilities Network Management System Web Gateway component has been installed. Refer to the *Oracle Utilities Network Management System Installation Guide* for complete instructions.

Installation Overview

The Oracle Utilities Network Management System MultiSpeak Adapter is delivered as five files:

- **$NMS_BASE/dist/install/nms-multispeak.ear.base**: NMS MultiSpeak adapter application.
- **$NMS_BASE/sdk/java/lib/multispeak-4.1.0.jar**: Java classes generated from MultiSpeak 4.1.0 WSDLs.
- **$NMS_BASE/sdk/java/lib/nms-multispeak-sdk-1.12.0.1.0.jar**: Java classes needed to build custom plugins.
- **$NMS_BASE/sdk/java/docs/nms-multispeak-docs.zip**: Documentation (javadoc) for classes included into multispeak-4.1.0.jar and nms-multispeak-sdk-1.12.0.1.0.jar archives.
- **$NMS_BASE/sdk/java/samples/nms-multispeak-plugins.zip**: Java project, which can be used as a starting point for building custom plugins for SCADA components of the NMS MultiSpeak adapter.

The `nms-install-config` script is used to apply adapter configuration changes and create the `nms-multispeak.ear` file, which can be deployed to the Oracle WebLogic Server (see Software Configuration on page 11-7 for configuration instructions).

Deploying the `nms-multspeak.ear` file on the same server as the cesejb.ear file is not supported; however, both managed servers do need to be in the same Oracle WebLogic Server domain.

Adapter Installation Instructions for Oracle WebLogic Server

Topics in this section:

- Create a Managed Server (Optional)
- Configure Data Source for the Adapters Managed Server

- Deploy the Adapter

Create a Managed Server (Optional)

To simplify creation of a new managed server, you may clone an existing Oracle Utilities Network Management System managed server.

1. Log in to the WebLogic Server Administration Console.

   Note: The URL for WebLogic will be http://*hostname:port*/console where *hostname* represents the DNS name or IP address of the Administration Server, and *port* represents the number of the port on which the Administration Server is listening for requests (port 7001 by default).

2. Click **Lock & Edit**.
3. In the **Domain Structure** tree, expand **Environment**, then select **Servers** to open the Summary of Servers page.
4. Select an Oracle Utilities Network Management System server in the Servers table and click **Clone**.
5. Click the link to the cloned server, select the General tab, change the Listen Port and SSL Listen Port to unique values.

Configure Data Source for the Adapters Managed Server

You may configure a new JDBC data source or add the adapter managed server as a target to an existing Oracle Utilities Network Management System **read/write** data source.

Note: See "Configure Database Connectivity" in the *Oracle Utilities Network Management System Installation Guide* for information on creating JDBC data sources.

1. In the **Domain Structure** tree, expand **Services**, then select **Data Sources**.
2. In the Data Sources table, click the **data source name** (either a new data source or an existing read/write NMS data source) to open the Settings for *JDBC_Data_Source_Name* page.
3. Select the **Targets** tab.
4. Add the adapter managed server to the list of targets.
5. Click **Save**.

Enabling Support for Plain HTTP

By default the adapter is configured to only accept incoming requests over HTTPS. To enable support for plain HTTP, add or uncomment the line in $NMS_CONFIG/jconfig/build.properties file:

```
option.no_multispeak_force_https
```

Then build new nms-multispeak.ear by running:

```
nms-install-config --java
```

Authentication Methods

By default the adapter is configured to use Basic HTTP Authentication for incoming web service requests. If credentials from the MultiSpeak message header should be used instead, add or uncomment the line in $NMS_CONFIG/jconfig/build.properties file:

```
option.no_multispeak_http_auth
```

Then build new nms-multispeak.ear by running:

```
nms-install-config --java
```

Notes:

- This parameter has no effect on JMS transport mechanism. It cannot use Basic HTTP Authentication mechanism.
- When Basic HTTP Authentication is not used, the configuration parameter "`config.message_credentials_required`" allows skipping authentication when credentials are not present in the message.

The adapter authorizes incoming web service requests by checking that caller that has the 'NmsWrite' role in WebLogic Server.

Deploy the Adapter

1. In the left pane of the Administration Console, select **Deployments**.
2. In the right pane, click **Install**.
3. In the Install Application Assistant, locate the nms-multispeak.ear file.
4. Click **Next**.
5. Select **Install this deployment as an application**.
6. Click **Next**.
7. Select the servers and/or clusters to which you want to deploy the application.

   Note: If you have not created additional Managed Servers or clusters, you will not see this assistant page.
8. Click **Next**.
9. Set the deployed name of the application to: *nms-multispeak*.
10. Click **Next**.
11. Review the configuration settings you have specified.
12. Click **Finish** to complete the installation.

Clustered Deployment

When MultiSpeak Adapter is deployed on a WebLogic cluster, the web service front end is active on all cluster nodes. However, the node that processes a request differs for different components of the Adapter.

For AVL components the node which received the request will process it, which balances the load between the cluster nodes.

For AMR and SCADA components there is a single "active" node that does the processing. All requests received by different nodes are forwarded to the "active" node. If the "active" node fails one of the remaining nodes will become "active" automatically. When this happens the AMR and SCADA adapter components will go through an initialization process

on the node that has become "active". For the SCADA component this also means that it will start a new synchronization sequence with the SCADA system(s).

Note: clustered deployment assumes that there is a software or hardware load balancer present to direct incoming web service request to different nodes of the cluster.

JMS Transport Mechanism

- The JMS transport mechanism is based on the SOAP over JMS specification.
- Two JMS queues are used per communication channel (one for requests and another for responses) to simulate synchronous communication.
- Each individual request is synchronous. The system places the message on the request queue and waits for a reply to arrive on the response queue.
- TextMessage or BytesMessage JMS message classes can be used. In both cases message must be a valid MultiSpeak message.
- Requests and responses are connected through JMSCorrelationID JMS header.
- In the request message, the JMS header JMSReplyTo must contain the queue where response message should be sent.
- SOAP protocol versions 1.1 and 1.2 are supported.
- There is no support for accessing a WSDL over JMS.

The following table describes how JMS message properties, specific to SOAP over JMS, are being used:

JMS Message Property	Value
SOAPJMS_binding	Version "1.0"
SOAPJMS_targetService	"SCADA_Server", "OD_Server" or "OA_Server" depending on the target system
SOAPJMS_soapAction	SOAP action
SOAPJMS_contentType	"text/xml; charset="utf-8""
SOAPJMS_isFault	"true" for SOAP fault messages

Configuring JMS Support

Incoming Data Flows

Support for accepting incoming requests over JMS in NMS MultiSpeak adapter is controlled by changing value of the config.multispeak_jms property in $NMS_CONFIG/jconfig/build.properties file.

Possible values:

- **none:** JMS support is disabled
- **single:** single JMS queue for all incoming data flows
- **scada:** separate JMS queue for each incoming SCADA data flow (for backward compatibility value 'multiple' has the same effect as 'scada')
- **amr:** separate JMS queue for each incoming AMR data flow

- **avl:** separate JMS queue for each incoming AVL data flow

  Note: 'scada', 'amr', and 'avl' can be specified together.

By default JMS support is disabled.

After modifying the $NMS_CONFIG/jconfig/build.properties file, regenerate the nms-multispeak.ear with the new configuration by executing:

```
nms-install-config --java
```

JNDI names of JMS connection factory and queue(s) used for incoming data flows are fixed.

Connection Factory

nms-amr/ConnectionFactory

Queues

Single Queue Mode

In single queue mode, all incoming requests are sent to the same JMS queue: nms-amr/queue/OA.

Multiple Queues Mode

When multiple incoming queues are used each incoming MultiSpeak data flow uses its own JMS queue.

List of JMS queues and associated MultiSpeak operations:

- nms-amr/queue/OAPingURL

  PingURL
- nms-amr/queue/OAGetMethods

  GetMethods
- nms-amr/queue/OAStatusChangedNotificationByPointID

  SCADAStatusChangedNotification

  SCADAStatusChangedNotificationByPointID
- nms-amr/queue/OAStatusChangedNotificationByPointIDSync

  StatusChangedNotificationByPointID
- nms-amr/queue/OAAnalogChangedNotificationByPointID

  SCADAAnalogChangedNotification

  SCADAAnalogChangedNotificationByPointID
- nms-amr/queue/OAAnalogChangedNotificationByPointIDSync

  AnalogChangedNotificationByPointID
- nms-amr/queue/OATagChangedNotificationByPointID

  SCADATagChangedNotification

  SCADATagChangedNotificationByPointID
- nms-amr/queue/OATagChangedNotificationByPointIDSync

  TagChangedNotificationByPointID
- nms-amr/queue/OAInitiateStatusReadByPointID

  InitiateStatusReadByPointID

- nms-amr/queue/OAHighlightObjectInDisplay

  HighlightObjectInDisplay
- nms-amr/queue/OAInitiateTagReadByPointID

  InitiateTagReadByPointID
- nms-amr/queue/OAODEventNotification

  ODEventNotification
- nms-amr/queue/OAFormattedBlockNotification

  FormattedBlockNotification
- nms-amr/queue/OAMeterChangedNotification

  MeterChangedNotification
- nms-amr/queue/OAAVLChangedNotification

  AVLChangedNotification

Outgoing Data Flows

The JMS connection factory for outgoing data flows is defined in the CES_PARAMETERS database table.

- The JMS queues used for outgoing messages are configured via the following database tables:
  - SCADA_LINKS and SCADA_LINK_OPS for the SCADA component.
  - AMR_LINKS and AMR_LINK_OPS for the AMR component.

  The AVL component does not have outgoing data flows.

Software Configuration

Configuration for the AMR and AVL components of the Oracle Utilities Network Management System MultiSpeak Adapter comes from the following sources:

- CES_PARAMETERS database table
- Oracle Utilities Network Management System Configuration Rules

Support for Encrypted Configuration Parameters

Some configuration parameters that are stored in the CES_PARAMETERS database table contain sensitive information, such as authentication credentials, which should be protected. To protect this data, the VALUES column can be encrypted using Oracle WebLogic Server encrypt utility. This utility encrypts cleartext strings for use with Oracle WebLogic Server. Its output can then be used to populate values in CES_PARAMETERS database table.

For detailed information see "encrypt" in the Oracle WebLogic Server Command Reference.

AMR Configuration Parameters

Entries in the CES_PARAMETERS database table for the AMR component of the Oracle Utilities Network Management System MultiSpeak Adapter should have value

'AMRInterface' in the APP column. Column ATTRIB should contain name of the configuration parameter and column VALUE its value.

The following table describes the general configuration parameters.

Parameter	Description
config.allow_update_non_amr	Allows meter updates to be processed for meters that are not marked as AMR-enabled. This is only applicable to the incoming MeterChangedNotification messages. **Default:** false
config.always_process_unsolicited	Process received unsolicited meter status (per multispeak.unsolicited_meter_statuses parameter) as unsolicited even if there is an outstanding meter status request for the same meter. Default behavior is that if received meter status was used to satisfy outstanding meter status request it will not be processed as unsolicited message. **Default:** false
config.amr_vendor	AMR vendor. Supported AMR vendors: • **multispeak:** MultiSpeak-compliant AMR system. This parameter is required. **Default:** multispeak
config.bellwether_query_type	Query type for periodic read of bellwether meters. The query type defines the list of values to be read from meters (see the **multispeak.query_type** parameter 13 for details). **Supported Query Types:** • **voltage:** query voltage at the meter
config.bellwether_read_interval	Reading interval for bellwether meters in seconds. **Default:** 900 seconds
config.bellwether_scada_name	Name of the entry in the SCADA_IDS table to be used to report measurements read from bellwether meters. The measurements are reported through the SCADA component of this adapter so the entry in the SCADA_IDS table must have the ADAPTER_TYPE "MULTISPEAK". **Default:** AMR
config.credentials	Absolute path to the file containing user credentials the adapter will use to communicate with Oracle Utilities Network Management System. Either this parameter or both config.username and config.password parameters should be provided. If all are present, then the config.username/config.password pair is used.
config.enabled	Enables AMR processing. **Default:** false

Parameter	Description
config.ignore_unknown_meter_statuses	If enabled, then received meter status updates that correspond to the UNKNOWN meter status will be ignored. Otherwise such meter status updates will be recorded in the AMR_CU_METERS and AMR_CU_METERS_HISTORY tables. **Note:** UNKNOWN meter status will not be used to satisfy pending meter status requests; the system will attempt to ping the meter again until it receives an ON or OFF response or the configured number of attempts is exhausted. **Default:** true (enabled)
config.max_meter_status_age	Period of time in seconds after which meter status information received from AMR system is considered stale and has to be obtained from the AMR system again. **Default:** 300 seconds
config.max_ping_request_age	If difference between the current time and ping request time is greater than value of this parameter then the request is too old to be sent to the AMR system. Such requests are marked as completed in the AMR_RESPONSES table. The value is defined in seconds. **Default:** 3600 seconds
config.max_ping_response_age	If the difference between current time and the unsolicited ping response time is greater than value of this property, then the response is too old to be sent to the NMS. Such responses are removed from the AMR_RESPONSES table. **Default:** 3600 seconds
config.max_pings_per_cycle	Maximum number of meter ping requests to be processed in one cycle (cycle duration is defined by the config.ping_request_interval parameter). **Default:** 10000
config.max_responses_per_msg	Maximum number of meter ping responses to be sent to NMS in a single message. The allowed range for this parameter is [100...10000]. **Default:** 1000
config.message_credentials_required	If this parameter is set to false then credentials for authenticating with NMS are taken from the MultiSpeak header of the incoming message. If this parameter is set to false and credentials are not present in the MultiSpeak header of the incoming message then username and password configured in the adapter is used to authenticate with NMS. **Valid Values:** true|false. **Default:** true
config.multiphase_meter	Comma-separated list of possible values of the AMR_CU_METERS.METER_PHASES column that indicate a multiphase meter.

Parameter	Description
config.nms_url	URL for accessing Oracle Utilities Network Management System. If this parameter is not provided then it is assumed that MultiSpeak Adapter is deployed on the same Managed Server as cesejb.ear. This parameter is specified for each component of the adapter, but only one value is actually used; all components will connect to the same NMS instance. The value is taken from the first enabled component according to the following order of precedence: 1. SCADA 2. AMR 3. AVL Note: This parameter replaces the Foreign JNDI configuration used in earlier versions of the Adapter.
config.password	NMS user password. Value of this parameter should be encrypted.
config.phase_voltage_query_type	Query type for reading voltage value of the individual meter phases. When using voltage read to determine meter status this query type is used for multiphase meters. The query type defines the list of values to be read from meters (see the **multispeak.query_type** parameter page 13 for details).
config.ping_request_interval	Time interval in seconds between subsequent meter ping requests to the AMR system. **Default:** 60 seconds
config.unsolicited_message_dead band	Deadband value in seconds for unsolicited messages reporting same status for a meter. If several unsolicited messages of the same type are received within the deadband then only one of them will be processed. **Default:** 60 seconds
config.use_voltage_ping	Use meter voltage read instead of meter ping to determine meter status. Received voltage is compared against configured low voltage threshold value. A voltage value lower than the threshold is interpreted as the meter not having power. For multi-phase meters, voltage on any phase being below threshold means that the meter has no power. **Supported Options:** • **always:** always use voltage read • **multiphase:** only use voltage read for multiphase meters • **never:** never use voltage read **Default:** never.
config.username	Valid NMS username, which has the 'NmsService' role in WebLogic Server.

Parameter	Description
config.voltage_query_type	Query type for generic (single phase) meter voltage read. When using voltage read to determine meter status, this query type is used for single phase meters. The query type defines the list of values to be read from meters (see the **multispeak.query_type** parameter page 13 for details).
config.write_power_offs_to_db	If set to 'true', the adapter will write unsolicited meter power-off messages received from the AMR/AMI system into the AMR_POWER_OFFS table instead of delivering them to JMService. **Default:** false
config.ws_request_timeout	Timeout (in seconds) for web service requests to the AMR system. Request will fails if AMR system does not respond before the timeout expires. **Default:** 30 seconds
config.load_side_query_type	The list of values to be read from the meters, matching the query_type parameter. The query type defines the list of values to be read from meters (see the multispeak.query_type parameter page 11-13 for details).
config.load_side.<0|1>	The load side status translation map, either `CONNECTED` or `DISCONNECTED`. If the received meter load side status is not configured it will be treated as `CONNECTED`.

The following table describes configuration parameters specific to a particular AMR vendor. This could be any MultiSpeak-compliant AMR system.

Parameter	Description
multispeak.meter_status.<*external status*>	This parameter configures mapping between external (MultiSpeak) and internal meter status values. **Valid Values:** • **ON:** meter is energized • **OFF:** meter is deenergized • **UNKNOWN:** external meter status has no configured mapping. **Examples:** multispeak.meter_status.Outage=OFF multispeak.meter_status.PowerOff=OFF multispeak.meter_status.PowerOn=ON multispeak.meter_status.Restoration=ON multispeak.meter_status.Instantaneous=UNKNOWN multispeak.meter_status.NoResponse=UNKNOWN multispeak.meter_status.Inferred=UNKNOWN
multispeak.od_oa.url	This parameter configures the URL of the AMR system web service. **Default:** https://localhost/multispeak

Parameter	Description
multispeak.od_oa.username	Username to use when connecting to the AMR system web service. **Default:** empty string
multispeak.od_oa.password	Password to use when connecting to the AMR system web service. **Default:** empty string
multispeak.od_oa.header.<attribute>	Used to set the values for MultiSpeak header attributes. For example, the following would set the MultiSpeak header attribute 'Company' to the value 'Oracle': `multispeak.od_oa.header.Company=Oracle`
multispeak.od_oa.soap12	Indicates the SOAP protocol version to use for communicating with the AMR/AMI system. **Valid Values:** • **true:** SOAP version 1.2 will be used. • **false:** SOAP version 1.1 will be used. **Default:** false
multispeak.max_ping_attempts	Maximum number of attempts to ping a meter. **Default:** 3
multispeak.ping_attempt_interval	Number of seconds to wait for reply from the AMR system before resending a meter ping request. **Default:** 60 seconds
multispeak.send_meter_number_field	This parameter designates which field in the InitiateOutageDetectionEventRequest message should be used to submit meter numbers to the AMR system. **Valid Values:** • **meterID:** meterID element should be used • **objectID:** objected attribute should be used • **meterNo:** - meterNo attribute should be used **Default:** meterID
multispeak.unsolicited_meter_statuses	Comma-separated list of meter statuses for unsolicited "power up" and "last gasp" messages. **Example:** `multispeak.unsolicited_meter_statuses=Outage,Restoration`

Parameter	Description
multispeak.max_update_attempts	Maximum number of retries for a MeterChangedNotification request to enable|disable meters. This is only supported when Oracle Utilities Network Management System is integrated with Oracle Utilities Smart Grid Gateway. **Default:** 3
multispeak.update_attempt_interval	Number of seconds the adapter will wait after failure before retrying MeterChangedNotification request to enable|disable meters. This is only supported when Oracle Utilities Network Management System is integrated with Oracle Utilities Smart Grid Gateway. **Default:** 60 seconds
multispeak.max_ping_batch_size	Maximum number of meters to be included in a single ping request to the AMR/AMI system. If the number of pending meter pings exceeds this value, then multiple requests will be sent. **Default:** 10000
multispeak.max_read_batch_size	Maximum number of meters to be included in a single read request to AMR/AMI system. If the number of pending meter read requests exceeds this value, then multiple requests will be sent. **Default:** 1000
multispeak.query_type.<query type>	Mapping between the meter read query type requested by NMS and the set of AMR/AMI meter field names to be read. <query type> is the NMS query type (either name of the query type or numeric code). **Supported Query Types:** **voltage:** The value of this parameter is a comma-separated list of MultiSpeak meter read field names.
multispeak.field.<known field>	Several values in the incoming messages containing meter readings have well-defined meaning. This parameter is used to map such value to MultiSpeak meter read field names. **Recognized <known field> Values:** • **METER_NUMBER:** - meter identifier • **READ_TIME:** meter reading timestamp. Value of this parameter is a comma-separated list of MultiSpeak meter read field names, which contain the <known field> value. If more than one the listed fields is present in the message at the same time then the list order defines field precedence (fields at the front of the list have higher precedence).

JNDI Name for JMS Connection Factory

When JMS transport is used this parameter defines JNDI name of the JMS connection factory used for NMS to AMR data flows.

Parameter	Description
multispeak.jms_cf_name	JNDI name of the JMS connection factory which should be used for NMS to AMR data flows. **Default:** ConnectionFactory

JMS Connection Credentials

These parameters are used if credentials are required to establish connection to JMS server. They are passed to the createConnection method of JMS connection factory.

Parameter	Description
multispeak.jms_user	JMS connection username.
multispeak.jms_password	JMS connection password.

AMR_LINKS

The AMR_LINKS database table is used to configure communication links to the AMI/AMR system. It is allowed to configure multiple links. The adapter will use the active link with the lowest value in the PRIORITY column. The adapter **will not** automatically switch to another link if the current link fails. HTTP/HTTPS and JMS links are supported.

For HTTP links WS_URL column is used to specify URL of the AMI/AMR system web service.

For JMS links, the REQUEST_QUEUE and RESPONSE_QUEUE columns are used to specify JNDI names of JMS queues used to send requests to and receive responses from AMI/AMR system.

The value in the TIMEOUT column controls how long the adapter should wait for response from AMI/AMR system (in seconds). This is only applicable to JMS links. The maximum allowed value is 3600 (1 hour).

The value in the PERSISTENT column defines delivery mode for JMS messages. If set to 'Y' then JMS messages are persistent, otherwise they are not persistent. By default, messages are not persistent. This is only applicable to JMS links.

The SITE column should contain the site value, as also used in the CES_PARAMETERS table.

Configuration in this table, if present, overrides existing configuration parameter 'multispeak.od_oa.url'.

Example

```
INSERT INTO amr_links (id, ws_url, priority, active, site)
VALUES (1, 'http://localhost:8088/mockAMR', 1, 'Y', 'local');
INSERT INTO amr_links (id, ws_url, priority, active, site)
VALUES (2, 'http://localhost:8089/mockAMR', 2, 'N', 'local');
```

```
INSERT INTO amr_links (id, request_queue, response_queue, timeout,
persistent, priority, active, site)
VALUES (3, 'queue/AmrRequest', 'queue/AmrResponse', 30, 'N', 3, 'N',
'local');
```

AMR_LINK_OPS

The AMR_LINK_OPS table can be used to configure JMS transport differently for individual web service operations. If an operation does not have a record in the AMR_LINK_OPS table, then values from the parent AMR_LINKS record are used.

- The LINK_ID column is the foreign key into the AMR_LINKS table.
- The OPERATION column is used to specify web service operation name. Supported operation names:
  - PingURL
  - GetMethods
  - InitiateOutageDetectionEventRequest
  - GetSupportedFieldNames
  - InitiateMeterReadingsByFieldName
  - MeterChangedNotification.
- The REQUEST_QUEUE and RESPONSE_QUEUE columns are used to specify JNDI names of JMS queues used to send requests to and receive responses from the AMI/AMR system.
- The value in the TIMEOUT column controls how long the adapter should wait for response from AMI/AMR system (in seconds). Maximum allowed value is 3600 (1 hour).
- The value in the PERSISTENT column defines delivery mode for JMS messages. If set to 'Y', then JMS messages are persistent, otherwise they are not persistent. By default messages are not persistent.
- The SITE column should contain the site value, as also used in the CES_PARAMETERS table.

Example

```
INSERT INTO amr_link_ops (id, link_id, operation, ws_url,
request_queue, response_queue,
timeout, persistent, site)
VALUES (31, 1, 'PingURL', 'http://localhost:8088/PingURL', '','',
30, 'N', 'local');
INSERT INTO amr_link_ops (id, link_id, operation, ws_url,
request_queue, response_queue, timeout,
persistent, site)
VALUES (32, 3, 'PingURL', '', 'queue/AmrRequest_PingURL',
'queue/AmrResponse_PingURL', 30, 'N', 'local');
```

Overriding Configuration Parameters

The MultiSpeak Adapter configuration parameters (in the CES_PARAMETERS database table) can be overridden by setting system properties when starting the WebLogic server where the adapter is deployed.

The format of the Java Virtual Machine command-line argument for setting system property.

```
-D<component>.<configuration parameter>=<value>
```

where

- **component:** MultiSpeak Adapter component the configuration parameter applies to.

  Possible values:

  - `AVLInterface`
  - `AMRInterface`
  - `SCADAInterface`

- **configuration parameter:** configuration parameter name
- **value:** configuration parameter value

Example

Disable the MultiSpeak adapter's AMR component by setting the AMR component's 'config.enabled' configuration parameter to `false`.

```
-DAMRInterface.config.enabled=false
```

Storing Meter Readings in AMR_RESPONSES Table

If the adapter is used to request meter readings from the AMR/AMI system the received values are stored in the AMR_RESPONSES database table. Product configuration provides single column (VOLTAGE) for storing meter readings. If additional values need to be stored then desired number of columns should be added to the AMR_RESPONSES table and project-specific version of the eclipselink-orm.xml configuration file need to be created. The columns should have type VARCHAR2. The below set of directions should be used to define your project version of this file.

1. In your <project>/jconfig directory, create a subdirectory structure as follows:

   ```
   <project>/jconfig/override/nms-multispeak-ejb.jar/META-INF/
   ```

2. Copy the Product version of the eclipselink-orm.xml file used by MultiSpeak adapter.

   Note: This file can be found in the product/jconfig/override/nms-multispeak-ejb.jar/META-INF/ directory.

3. Save the file to the META-INF directory that you created in step 1.
4. In the file you should find the following entry (enclosing entity-mapping tag is omitted) for mapping meter read field "Voltage" to the column VOLTAGE in the AMR_RESPONSES table.

```
<entity class="com.splwg.oms.interfaces.amr.model.MeterStatus">
  <attributes>
    <basic name="Voltage" access="VIRTUAL" attribute-type="String">
      <column name="VOLTAGE"/>
    </basic>
  </attributes>
</entity>
```

5. Add additional <basic> elements for the columns added to the AMR_RESPONSES table. Attribute 'name' defines the name of the meter read field coming from the AMR/AMI system. Attribute 'access' should have value 'VIRTUAL'. Attribute 'attribute-type' should have value 'String'. Nested element <column> defines the database column name.
6. Execute 'nms-install-config --java' to generate new nms-multispeak.ear binary.

AVL Configuration Parameters

Entries in the CES_PARAMETERS database table for the AVL component of the Oracle Utilities Network Management System MultiSpeak Adapter should have value 'AVLInterface' in the APP column. Column ATTRIB should contain the name of the configuration parameter and the column VALUE should contain its value.

The AVL component requires configuration for converting crew location information received from the AVL system into the Oracle Utilities Network Management System coordinate system. Coordinate conversion is done using reference point coordinates that are known for both systems. At least two reference points are required for coordinate conversion to work.

The AVL configuration parameters are described in the following table:

Parameter	Description
config.credentials	Absolute path to the file containing user credentials the adapter will use to communicate with Oracle Utilities Network Management System during initialization process. Either this parameter or both config.username and config.password parameters should be provided. If all are present then config.username/config.password pair is used.
config.username	Valid NMS username, which has the 'NmsService' role in WebLogic Server.
config.password	NMS user password. Value of this parameter should be encrypted.
config.nms_url	URL for accessing Oracle Utilities Network Management System. If this parameter is not provided then it is assumed that MultiSpeak Adapter is deployed on the same Managed Server as cesejb.ear. This parameter is specified for each component of the adapter, but only one value is actually used; all components will connect to the same NMS instance. The value is taken from the first enabled component according to the following order of precedence: 1. SCADA 2. AMR 3. AVL Note: This parameter replaces the Foreign JNDI configuration used in earlier versions of the Adapter.

Parameter	Description
config.message_credentials_required	If this parameter is set to false then credentials for authenticating with NMS are taken from the MultiSpeak header of the incoming message. If this parameter is set to false and credentials are not present in the MultiSpeak header of the incoming message then username and password configured in the adapter is used to authenticate with NMS. **Valid Values:** true/false. **Default:** true
avl.num_reference_points	Number of configured reference points
avl.reference_point<N>.x	X coordinate of the reference point N in the Oracle Utilities Network Management System coordinate system
avl.reference_point<N>.y	Y coordinate of the reference point N in the Oracle Utilities Network Management System coordinate system
avl.reference_point<N>.longitude	Geographic longitude of the reference point N
avl.reference_point<N>.latitude	Geographic latitude of the reference point N
avl.xy_scale	Number of decimal points to use when rounding X/Y coordinates
avl.lat_long_scale	Number of decimal points for rounding longitude/latitude coordinates
config.enabled	Enables AVL processing Default: false

Credentials Files

Credentials files may be used to configure usernames and passwords to be used by the parts of the adapter that communicate with the Oracle Utilities Network Management System.

Credentials files should only be readably by the operating system account under which application server is running.

The format of a credentials file is described in the following table:

Property	Description
nms.username	Valid NMS username, which has the NmsService role in WebLogic Server.
nms.password	NMS user password

The following illustration shows a sample credentials file.

```
#
nms.username=amr
nms.password=amr-user-password
```

Oracle Utilities Network Management System Configuration Rules

Below is the list of configuration rules in the Oracle Utilities Network Management System, which control AMR-related functionality. These rules are not directly used by the Oracle Utilities Network Management System MultiSpeak Adapter.

amrInterfacesEnabled

This rule enables AMR processing in JMService. Its value indicates the AMR processing types that are available. AMR processing is disabled if this rule is set to 0 (default value).

Available types of AMR processing:

- 1 - Outage detection
- 2 - PSO verification
- 4 - PDO verification
- 8 - Restoration verification
- 16 - Manual AMR processing
- 32 - Unsolicited power-up processing

The rule value is a bitmask, which allows any combination of AMR processing types to be enabled. For example, if you want to enable outage detection (1) and restoration verification (8) processing, you would set the rule to 9.

meterOffThreshold

Maximum probability of meter having power when meter is still assumed to be "off". The default value is 0.

meterOffTroubleCode

Trouble code to be used when a call should be created because of information received from AMR system.

meterOnThreshold

Minimum probability of meter having power when meter is still assumed to be "on". The default value is 100.

meterQueryThreshold

This parameter is used to determine if a meter can be queried when an active request exists. When a new request is made, existing requests will be evaluated to see if any contain meter(s) from the new request. If a match is found, and the difference between the time the request was received and current time is less than value of this rule in seconds, that meter will be rejected from the new request. If set to -1 (default value), this rule will not be enforced.

meterPingPercentage

This parameter governs the percentage of meters to ping for an AMR action. When set to 100, it will ping all AMR meters downstream from the outage device. When set to -1, it will ping one AMR meter on each SND. When set to any other number between 1 and 99, JMService will attempt to ping the specified percentage of meters for each transformer affected by the outage (the resulting number of meters is rounded up so that at least one meter per transformer is pinged). It is possible to configure this rule differently for different device classes. The default value of this rule is 100.

useMeterTimeForDetection

This configuration rule determines if meter read time reported by AMR system should be used as call time for incidents created by outage detection functionality.

Valid values:

- no - Meter read time will not be used, instead current system time will be used (this is the default behavior)
- yes - Meter read time will be used

If the rule_value_2 is greater than 0, and the difference between the current time and the meter read time is greater than the number of seconds specified by rule_value_2, then the meter read is too old for outage detection. The default value is 3600 seconds (1 hour).

useMeterTimeForRestoration

This configuration rule determines if meter read time reported by AMR system should be used to adjust outage restoration time as part of outage restoration verification functionality. Outage restoration time is only updated if restoration time calculated from AMR data is earlier then the current restoration time.

Valid values:

- no - outage restoration time will not be modified
- latest - outage restoration time will be updated with the latest meter read time amongst the meters which reported power on for the restored outage (this is the default behavior)
- earliest - outage restoration time will be updated with the earliest meter read time amongst the meters which reported power on for the restored outage
- percentile - outage restoration time will be updated with the earliest meter read time which covers the desired percentile of meters which have reported power on. Percentile value is specified using rule_value_2 field. It should be in the range from 1 to 99 (inclusive).

Meter read times preceding outage start time or past current time are ignored.

Example of 'percentile' setting.

```
rule_value_1 = 'percentile'
rule_value_2 = 50
```

This configuration corresponding to using median value from the all meter read times for meters, which reported power on. Given following four meter read times

```
00:00:10
00:00:11
00:00:20
00:00:30
```

the median value would be 00:00:11 (second value out of four).

meterRequestSendDelay

This configuration rule is used to control how long the outage prediction engine should wait before sending a meter ping request to the MultiSpeak adapter. This rule is only applicable for PSO Verification, PDO Verification, and Restoration Verification requests.

meterRequestTTL

This configuration rule is used to control the "time-to-live" (TTL) for meter ping requests. This is the period of time NMS will wait for a responses from AMR system. Automated meter ping requests (PSO Verification, PDO Verification, and Restoration Verification) are considered completed when TTL expires. Manual meter ping requests, which were not explicitly completed or cancelled by the user, are automatically cancelled when TTL expires.

TTL is configurable per request type. It can either be a fixed value (for example, the PSO Verification request can remain active for 15 minutes) or it can be calculated based on the number of meters in the request combined with minimum and maximum values. If TTL is set to 0, then automated meter ping requests remain active until the first response is received. Manual meter ping requests in this case remain active until explicitly completed or cancelled by the user.

meterPingSuppress

This configuration rule can be used to suppress sending meter ping requests to the AMR system based on the request type.

writePowerOffsToDB

This configuration rule determines if JMService will create a new incident when a power-off message is received from the AMR system.

If this rule is set to "no", then incidents for power-off messages will be created by JMService. This is the default behavior.

If this rule is set to "yes", then, instead of creating an incident, JMService will insert a record into the AMR_POWER_OFFS database table. This record will contain the meter id and power-off timestamp. An external process is expected to read the table and process new entries.

For example, such a process can obtain customer information associated with the meter id and insert a record into the TROUBLE_CALLS table so that the NMS IVR Adapter will process it and create a new incident. This allows more flexibility to the process of creating incidents from AMR-reported power-off messages.

Adapter Interface Communication Overview

The Oracle Utilities Network Management System MultiSpeak Adapter provides a reliable and configurable way of connecting MultiSpeak-compliant AMR, AVL, and SCADA systems to the Oracle Utilities Network Management System. The interface connects to the AMR systems by use of MultiSpeak-compliant SOAP/XML calls over the HTTPS protocol. JMS queues can also be used as the transport mechanism. The interface connects to the Oracle Utilities Network Management System through direct database access using JDBC and by use of a CORBA connection through the Oracle Utilities Network Management System Web Gateway.

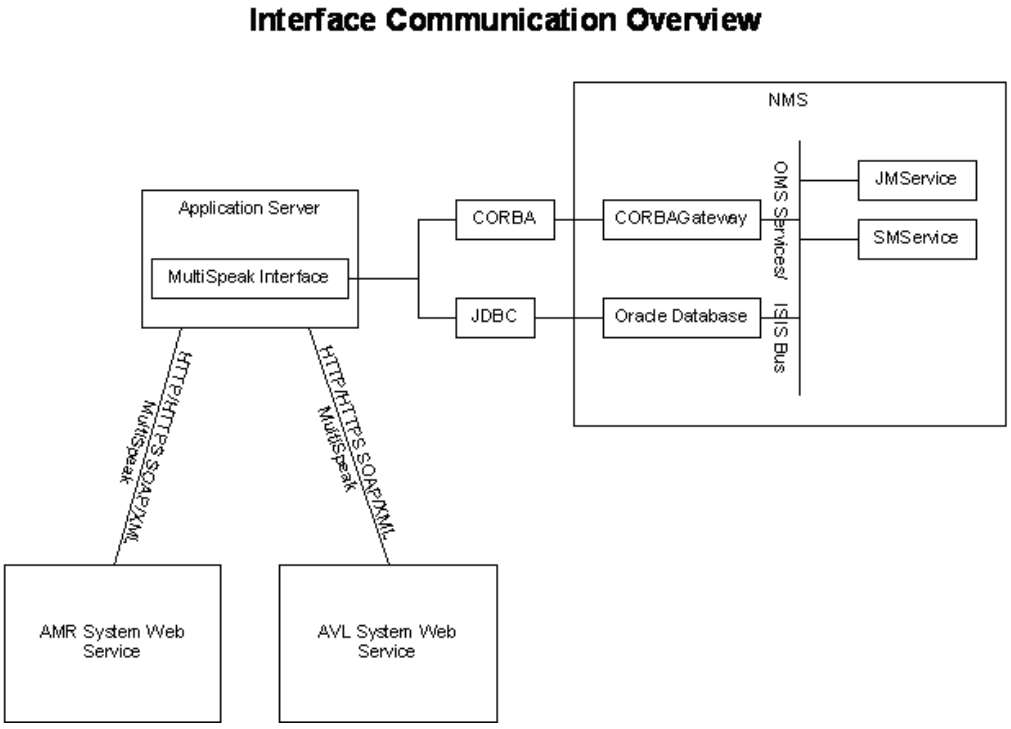

Adapter Design

Supported Data Flows

Oracle Utilities Network Management System MultiSpeak Adapter supports following data flows described in the MultiSpeak Web Services Version 4.1 specification.

Oracle Utilities Network Management System to an AMR system:

- **InitiateOutageDetectionEventRequest**

  Oracle Utilities Network Management System requests meter status information from the AMR system.

- **InitiateMeterReadingsByFieldName**

  Oracle Utilities Network Management System requests specified meter readings for the listed set of meters from the AMR system.

- **MeterChangedNotification**

  Oracle Utilities Network Management System requests that the AMR/AMI system enables or disables messages from specific meters. For example, this flow can be used to temporarily disable messages from a meter which is giving faulty readings. NMS sends meterStatus value "Inactive" to disable a meter and "Active" value to enable it.

An AMR system to Oracle Utilities Network Management System:

- **ODEventNotification**

  AMR system reports meter status information to the Oracle Utilities Network Management System.

- **FormattedBlockNotification**

  AMR system reports meter readings to Oracle Utilities Network Management system. This message is sent in response to the InitiateMeterReadingsByFieldName request.

- **MeterChangedNotification**

  AMR/AMI system reports to Oracle Utilities Network Management System that one or more meters are enabled or disabled. NMS expects an "Inactive" meterStatus value when the meter is disabled and "Active" value when it is enabled.

An AVL system to Oracle Utilities Network Management System:

- **AVLChangedNotification**

  AVL system reports crew location information to the Oracle Utilities Network Management System.

Incoming requests (ODEventNotification, FormattedBlockNotification, AVLChangedNotification, and MeterChangedNotification) are authenticated against the list of valid Oracle Utilities Network Management System users.

AMR Business Processes

This section describes the utility business processes related to AMR that can be supported through the Oracle Utilities Network Management System MultiSpeak Adapter.

Outage Detection

The vendor AMR system detects no power for a meter, either because of a "last gasp" meter message or from scheduled meter polling. A "power out" call is submitted to Oracle Utilities Network Management System, which generates a probable outage event.

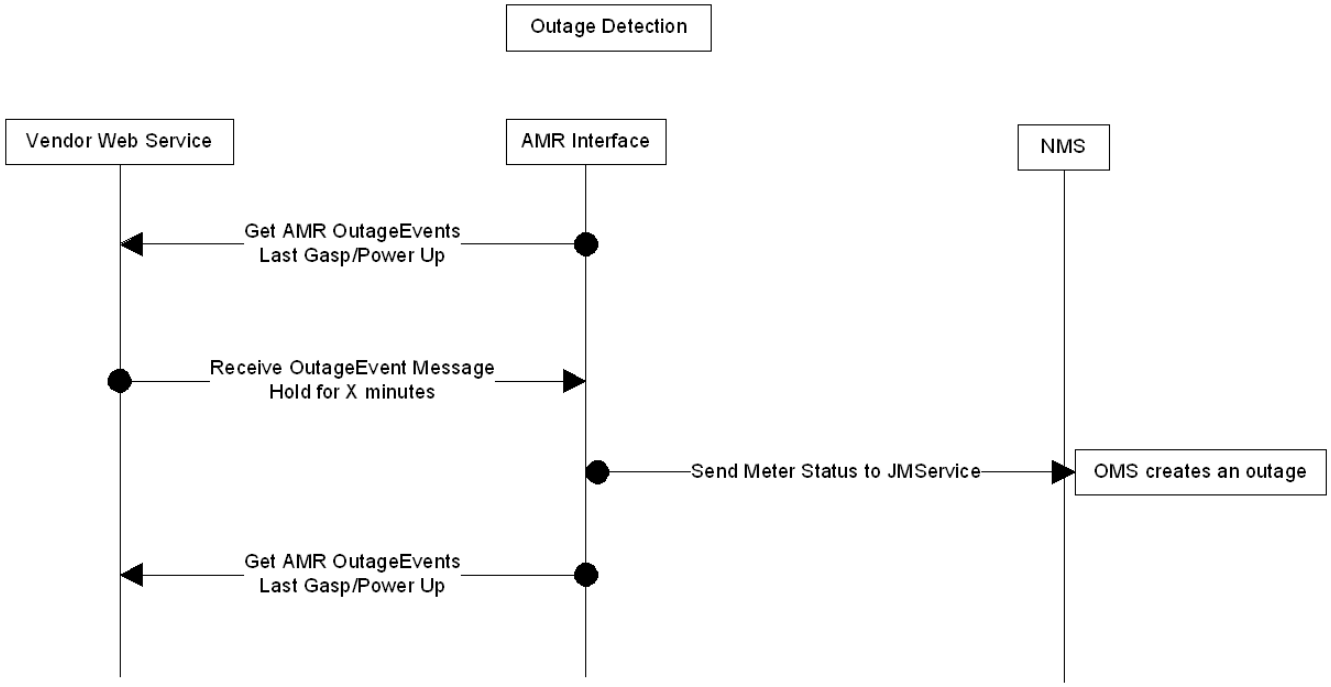

PSO Verification

One customer call is received, generating a probable service outage in Oracle Utilities Network Management System. The Oracle Utilities Network Management System MultiSpeak Adapter is notified of the new probable outage, and the customer meter is pinged to verify power status.

If the meter reports that the power is still on, then we have conflicting information from the customer and the meter, so the outage predication engine will set the status of this event to Verify. At this point, we believe that there is no outage, but that the customer has a problem, such as a blown fuse, within his home. This event must be resolved by a customer service representative contacting the caller to explain the situation to them.

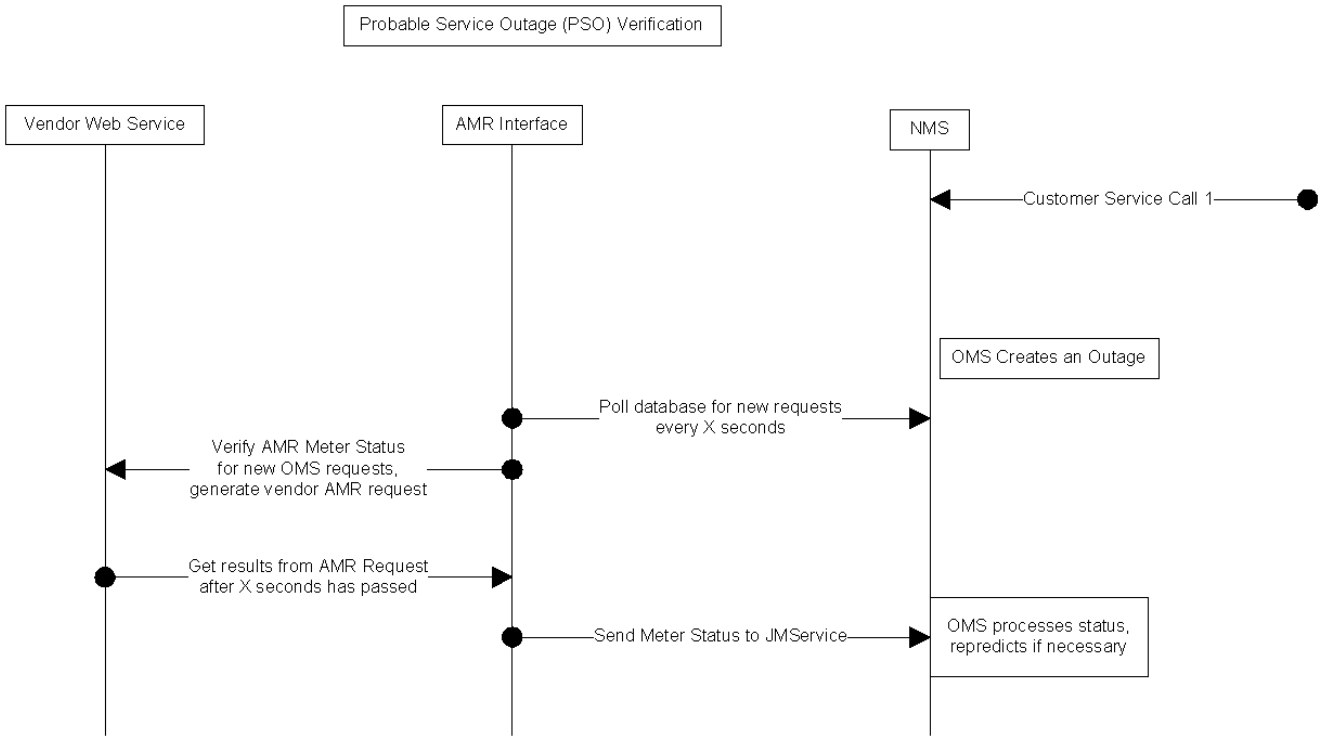

PDO Verification

Several customer calls are received, which are submitted into the Oracle Utilities Network Management System. The resulting probably outage rolls up to a device. The list of affected AMR customers is provided to the Oracle Utilities Network Management System MultiSpeak Adapter by the Oracle Utilities Network Management System outage prediction engine. The interface submits meter status requests to the AMR for any of the affected meters from which it has not already received a last gasp message. The received meter statuses are sent back to the prediction engine and the predicted outage device may change by moving downstream.

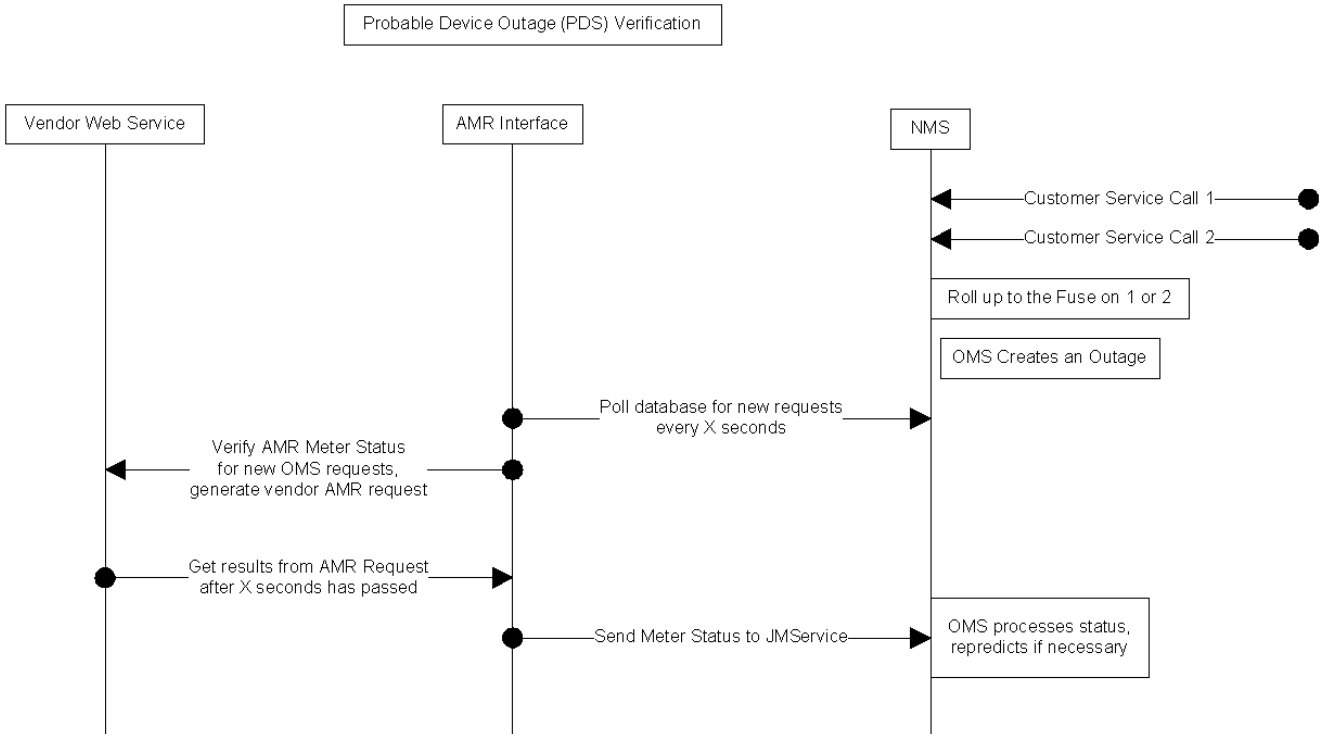

Restoration Verification

An outage event is restored in Oracle Utilities Network Management System, and a list of affected meters is provided by the outage prediction engine to the Oracle Utilities Network Management System MultiSpeak Adapter. The interface submits meter status requests to the AMR for any of the affected meters from which it has not received a "power up" message. The results are passed back to the Oracle Utilities Network Management System and the periodic cycle for getting outage events continues. The received meter statuses are sent back to the prediction engine. A power out status will result in another outage call and a nested outage that still needs restoration.

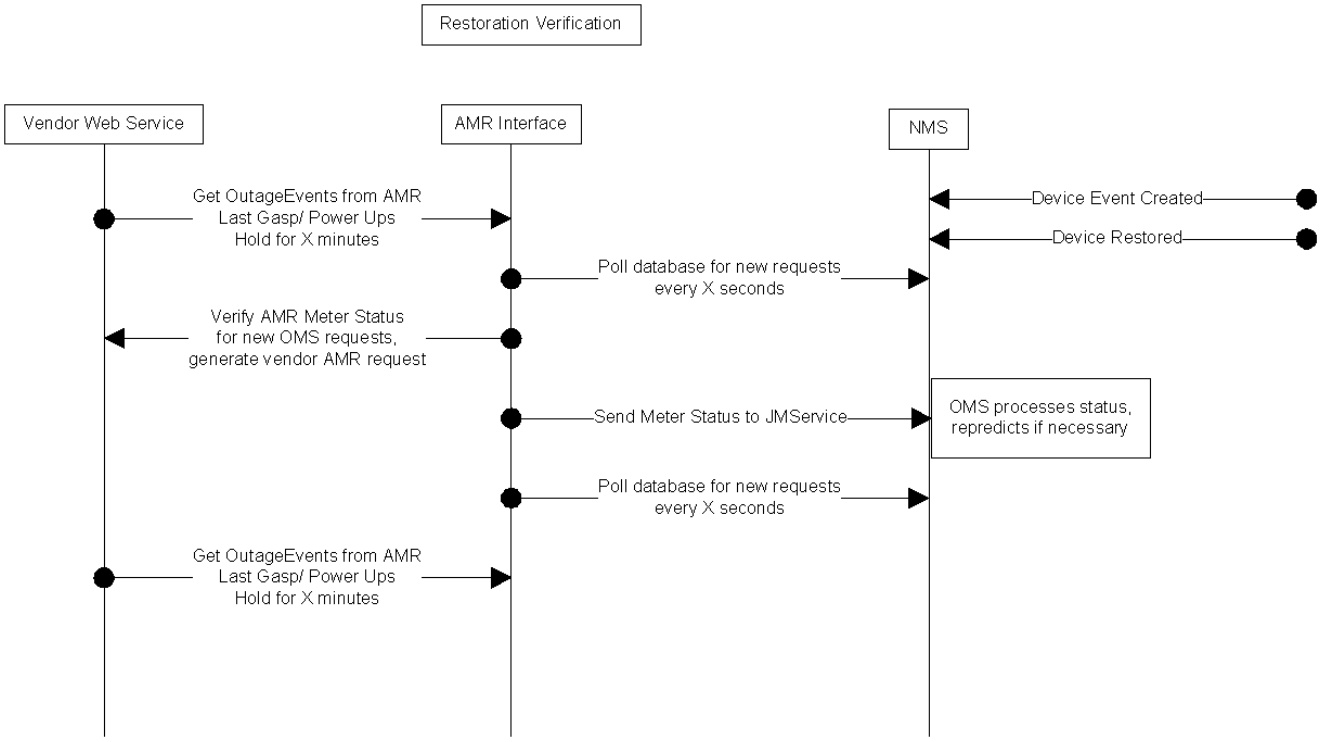

Unsolicited Power Ups

The AMR system can send unsolicited power up message when it detects that meter power has been restored. The adapter delivers such messages to the outage prediction engine, which uses them as part of Restoration Verification processing.

Manual Ping

In the diagram below, please note that the number indicates the sequence of actions:

1. The operator or system has chosen a device to "Ping".
2. Information about the new ping request is stored in the database.
3. The AMR application notes the new ping request and verifies the device.
4. A response is received from the meter.
5. The database is updated with some information about the request response. Oracle Utilities Network Management System is aware of the response data in the database and displays relevant information.

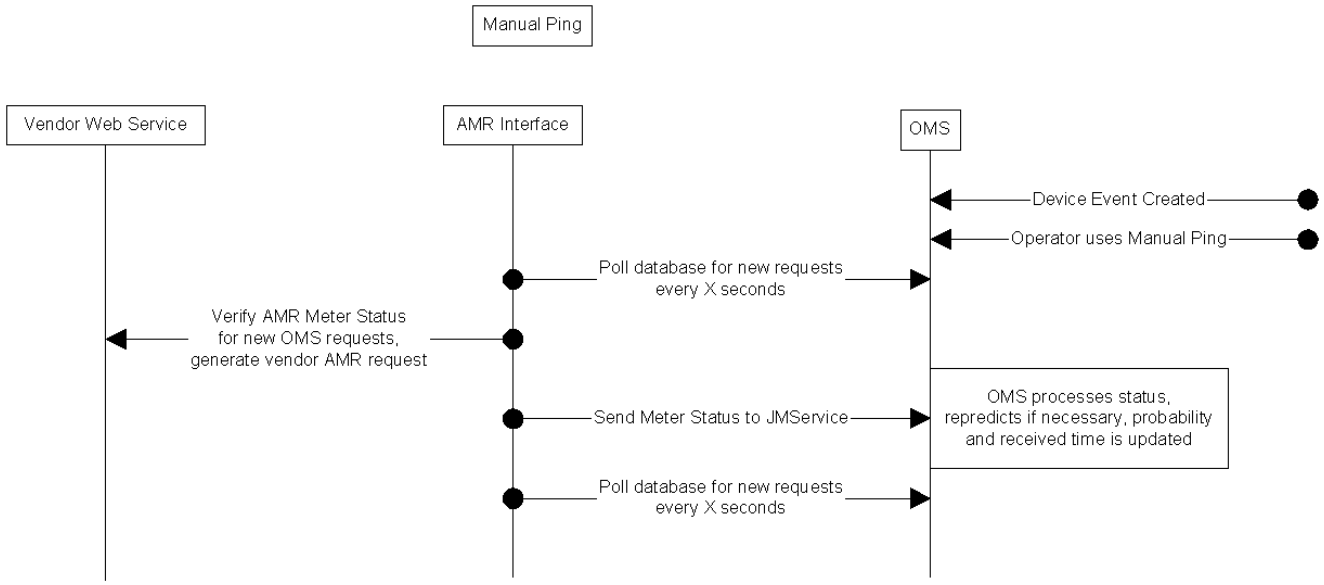

Urgent Ping

The adapter supports the ability to immediately ping a single meter. Such ping requests are initiated by sending PING high-level message containing single meter id to the adapter. Requests received via high-level message are processed right away without being subject to batching. They do not persist in database. Cache is not used to satisfy such requests so the AMR system is always contacted.

Business Scenario

1. The operator or system has chosen a device to "Ping."
2. PING high-level message containing meter id is sent to the adapter.
3. The adapter sends ping request to the AMR system.
4. A response is received from the AMR system.
5. The adapter sends PING_RESPONSE high-level message containing received meter status back to the client.

Reading Meter Values

In addition to requesting meter status information (pinging meters) the adapter can request meter readings of such values as voltage, current, etc. (depending of meter capabilities) from the AMR/AMI system.

Bellwether meters are a special case of requesting meter readings. For meters configured as bellwether the adapter would periodically issue meter read request to the AMR/AMI system and then publish received values as SCADA measurements.

Using Meter Voltages to Determine Power Status

Some utilities have multi-phase meters, especially in downtown mesh networks. Conventional meter power status pings only indicate that the meter has power, but not whether some phases do not have power. The adapter can use meter voltage information to form a more accurate picture of meters where one or two phases/legs may not have power. When using voltage to determine meter power status the adapter will consider meter as de-energized if any of the reported meter voltage values are below the low voltage threshold configured for the meter. The meter is considered energized if all the reported meter voltage values are at or above the low voltage threshold.

The following configuration tasks need to be performed to enable this functionality in the adapter:

1. Define low voltage threshold.

   The MultiSpeak adapter uses the value from the VOLTAGE_THRESHOLD column in the AMR_CU_METERS table as low voltage threshold for a meter. This column needs to be populated in order for the adapter to use voltage read to determine meter power status.

   The voltage threshold value needs to be put into the VOLTAGE_THRESHOLD column in the CU_METERS_CIS table. When the nms-update-customers script is executed, this value will be propagated to the CU_METERS and AMR_CU_METERS tables.

2. Configure the adapter to use voltage read to determine meter power status.

   The **config.use_voltage_ping** parameter needs to be set the value 'multiphase' or 'always'.

   Example,

```
INSERT INTO ces_parameters (app, attrib, value)
VALUES ('AMRInterface', 'config.use_voltage_ping', 'multiphase');
```

3. Provide phasing information for meters.

   If the **config.use_voltage_ping** configuration parameter is set to 'multiphase,' then the adapter needs a way to distinguish multiphase meters. This is done by checking the value in the AMR_CU_METERS.METER_PHASES column against the list of values specified in the configuration parameter. The AMR_CU_METERS.METER_PHASES column is populated from the CU_METERS_CIS.METER_PHASES column when nms-update-customers script is executed.

   For example:

```
INSERT INTO ces_parameters (app, attrib, value)
VALUES ('AMRInterface', 'config.multiphase_meter', '3,5,6,7');
```

4. Define query types for requesting meter voltage information from the AMI system.

   The **config.voltage_query_type** and **config.phase_voltage_query_type** configuration parameters need to specify query type names used to requests voltages from AMI system. **config.voltage_query_type** is used for single phase meter, and **config.phase_voltage_query_type** is used for multiphase meters. For each query type, a **multispeak.query_type.<**`query type name`**>** configuration parameter needs to specify the list of fields to be read from the AMI system (this configuration depends on AMI vendor).

   For example:

```
INSERT INTO ces_parameters (app, attrib, value)
VALUES ('AMRInterface', 'config.voltage_query_type', 'voltage');

INSERT INTO ces_parameters (app, attrib, value)
VALUES ('AMRInterface', 'config.phase_voltage_query_type',
           'phase_voltage');

INSERT INTO ces_parameters (app, attrib, value)
VALUES ('AMRInterface', 'multispeak.query_type.voltage',
           'Voltage');

INSERT INTO ces_parameters (app, attrib, value)
VALUES ('AMRInterface', 'multispeak.query_type.phase_voltage',
        'VoltageA,VoltageB,VoltageC');
```

Database Schema

Oracle Utilities Network Management System MultiSpeak Adapter uses several databases tables to store meter status information received from the AMR system and pending meter ping requests.

AMR_REQUESTS

AMR_REQUESTS is populated by the outage prediction engine when a request for meter information is submitted. There is one row per request, and each request can involve multiple meters.

Field	DataType	Nullable	Comments
REQUEST_IDX	NUMBER	No	AMR request id. PRIMARY KEY
EVENT_CLS	NUMBER	No	The class part of the handle of the event for which the AMR request was made.
EVENT_IDX	NUMBER	No	The index part of the handle of the event for which the AMR request was made.
REQUEST_TIME	DATE	No	The timestamp when the AMR request was created.
WHO_REQUESTED	VARCHAR2(32)	Yes	User name of the operator who created the AMR request.
AMR_COMPLETE_TIME	DATE	Yes	The timestamp when the AMR request was completed or cancelled.
WHO_COMPLETED	VARCHAR2(32)	Yes	User name of the operator who completed or cancelled the AMR request.
REQUEST_TYPE	NUMBER	Yes	Request type. Possible values: • 1 - PSO Verification • 2 - PDO Verification • 3 - Restoration Verification • 4 - Manual
QUERY_TYPE	NUMBER	Yes	Query type. Possible values: • 0 - simple meter status query • 1 - complex meter information query • 100 - voltage query • 101 - phase voltage query **Note:** Query types with values below 100 are meter status (ping) queries. Query types with values 100 and above are meter read queries.

Field	DataType	Nullable	Comments
STATUS	NUMBER	Yes	Status of the AMR request. Possible values: 1- active 2 - explicitly completed 3 -cancelled
DEVICE_CLS	NUMBER	Yes	The class part of the handle of the device for which the AMR request was made.
DEVICE_IDX	NUMBER	Yes	The index part of the handle of the device for which the AMR request was made.
NCG	NUMBER	Yes	NCG of the device for which the AMR request was made.
TTL	NUMBER(9)	Yes	The Time-To-Live of the request in seconds.

AMR_RESPONSES

The AMR_RESPONSES table is used to transfer meter status information between the outage prediction engine and the MultiSpeak adapter. The outage prediction engine inserts rows into this table when a request for meter information is submitted. Every request in AMR_RESPONSES is represented by one row for each meter requested. The MultiSpeak adapter updates this table as requested meter status information becomes available.

Field	DataType	Nullable	Comments
ID	Number	No	Unique record identifier. PRIMARY KEY
REQUEST_IDX	NUMBER	Yes	AMR request id.
REQUEST_TIME	DATE	Yes	Request timestamp.
METER_NO	VARCHAR2(256)	Yes	Meter number as known to the AMR system
METER_ID	NUMBER	No	NMS meter identifier.
REQ_STATUS	VARCHAR2(1)	Yes	Request status. Possible values: • N - new request (not yet sent to AMR) • P - pending request (waiting for AMR response) • S - suppressed request • R - AMR response received • C - completed request

Field	DataType	Nullable	Comments
STATUS	VARCHAR2(256)	Yes	Meter status received from AMR. Possible values: • ON - meter has power • OFF - meter does not have power
AMR_ERROR	VARCHAR2(256)	Yes	Error message received from the AMR system.
RECEIVED_TIME	DATE	Yes	Timestamp when the response was received from the AMR system.
RESULT_TIME	DATE	Yes	Timestamp returned by the AMR system for the meter status.
PROBABILITY	NUMBER	Yes	The probability of the meter having power (0 - no power; 100 - meter has power.)
ATTEMPT_COUNT	NUMBER(3)	Yes	Count of the attempts made to send a request to the AMR system.
VOLTAGE	VARCHAR2(16)	Yes	Meter voltage reading.
VOLTAGE_A	VARCHAR2(16)	Yes	Meter phase A voltage reading.
VOLTAGE_B	VARCHAR2(16)	Yes	Meter phase B voltage reading.
VOLTAGE_C	VARCHAR2(16)	Yes	Meter phase C voltage reading.

AMR_CU_METERS

Table AMR_CU_METERS contains information about all meters known to the Oracle Utilities Network Management System. This table is also used to cache the latest known meter status information to reduce the number of requests to the AMR system.

Field	DataType	Nullable	Comments
METER_ID	VARCHAR2(14)	No	Meter identifier in Oracle Utilities Network Management System.
METER_NO	VARCHAR2(20)	Yes	Meter identifier used by the AMR system.
RESULT_TIME	DATE	Yes	Timestamp of the latest meter status update.
POWER_UP_TIME	DATE	Yes	Timestamp of the latest power-up message.
LAST_GASP_TIME	DATE	Yes	Timestamp of the latest "last gasp" message.
ALT_METER_NO	VARCHAR2(256)	Yes	Alternative meter number.
AMR_ENABLED	VARCHAR2(1)	Yes	Indicator that meter is AMR-enabled.

Field	DataType	Nullable	Comments
STATUS	VARCHAR2(256)	Yes	Latest known meter status. Possible values: • ON - meter has power • OFF - meter does not have power
REQUEST_IDX	NUMBER	Yes	AMR request id for the latest received meter status.
PROBABILITY	NUMBER	Yes	Latest known probability of the meter having power (0 – no power; 100 – meter has power).
BELLWETHER	VARCHAR2(1)	Yes	Bellwether meter flag (Y/N)
METER_PHASES	VARCHAR2(1)	Yes	Meter phase/multiphase meter flag.
VOLTAGE_ THRESHOLD	NUMBER	Yes	Meter low voltage threshold.

AMR_CU_METERS_HISTORY

The AMR_CU_METERS_HISTORY table is used to store all meter status updates received from the AMR system. This table has the same columns as the AMR_CU_METERS table with the exception of the BELLWETHER column.

AMR_VOLTAGE_HISTORY

The AMR_VOLTAGE_HISTORY table is used to store meter voltage readings received from the AMR system.

Field	DataType	Nullable	Comments
METER_HIST_ID	NUMBER	No	Primary key (sequence generated).
METER_ID	NUMBER	Yes	NMS meter identifier.
METER_NO	VARCHAR2(256)	Yes	Meter number specific to the AMR system.
RESULT_TIME	DATE	Yes	Meter read time.
VOLTAGE	NUMBER	Yes	Meter voltage.
VOLTAGE_A	NUMBER	Yes	Phase A meter voltage.
VOLTAGE_B	NUMBER	Yes	Phase B meter voltage.
VOLTAGE_C	NUMBER	Yes	Phase C meter voltage.

SCADA Component

The Oracle Utilities Network Management System MultiSpeak Adapter's SCADA component has the capability of interacting with SCADA systems having a MultiSpeak-compatible interface.

The following functionality is available:

- Receiving device status updates from SCADA system
- Receiving analog and digital measurement updates from SCADA system
- Mapping of SCADA quality codes (applies to status and measurement updates)
- Receiving tag information from SCADA system
- Receiving alarm information from SCADA system
- Sending control request to SCADA system to operate devices and place/remove tags
- Sending device status information to SCADA system
- Sending NMS tags and other conditions to SCADA system
- Dynamic configuration of the mapping between SCADA points and NMS device/attribute pairs
- Display integration between NMS and SCADA system

A single instance of the adapter is capable of communicating with multiple SCADA systems. Several communication links can be configured for each SCADA system. If the currently active link fails, the adapter will automatically switch to the next link.

Supported Data Flows

NMS to SCADA

Heartbeat

PingURL

The adapter periodically sends **PingURL** message to the each configured SCADA system. Failure to send the message or error response from SCADA system (reply contains **errorObject** element) triggers switch to alternate link (if available). Upon restoration of communication with the SCADA system (**PingURL** has been sent successfully) synchronization sequence is executed.

PingURL Request Example

```
<S:Envelope xmlns:S="http://schemas.xmlsoap.org/soap/envelope/">
  <S:Header>
    <ns4:MultiSpeakMsgHeader xmlns:ns4="http://www.multispeak.org/
      Version_4.1_Release" xmlns:ns3="http://www.w3.org/1999/xlink"
      xmlns:ns2="gml" xmlns="cpsm" />
  </S:Header>
  <S:Body>
    <ns4:PingURL xmlns:ns4="http://www.multispeak.org/
     Version_4.1_Release"
     xmlns:ns3="http://www.w3.org/1999/xlink"
     xmlns:ns2="gml"
     xmlns="cpsm" />
  </S:Body>
</S:Envelope>
```

Synchronization/Integrity Check

The purpose of the synchronization sequence is to bring the state of devices in the NMS model up-to-date with the SCADA system. NMS supports two synchronization methods for device statuses, digital and analog measurements. At the beginning of the synchronization

sequence, NMS will make GetMethods call to determine the list of operations supported by the SCADA system. Synchronization method selection is based on configured preferred method and available SCADA operations.

The synchronization sequence is executed automatically after the connection to a SCADA system is established. It also can be triggered manually using following command

```
Action -java multispeak.SCADA resync
```

GetMethods

GetMethods retrieves lists of operations the SCADA system implements. It is used to determine available modes of syn-chronization. It is also used to determine if control requests can be send to SCADA.

GetMethods Request and Response Example

```
<S:Envelope xmlns:S="http://schemas.xmlsoap.org/soap/envelope/">
  <S:Header>
    <ns4:MultiSpeakMsgHeader
     xmlns:ns4="http://www.multispeak.org/
     Version_4.1_Release"
     xmlns:ns3="http://www.w3.org/1999/xlink"
     xmlns:ns2="gml" xmlns="cpsm" />
  </S:Header>

  <S:Body>
    <ns4:GetMethods xmlns:ns4="http://www.multispeak.org/
     Version_4.1_Release"
     xmlns:ns3="http://www.w3.org/1999/xlink"
     xmlns:ns2="gml"
     xmlns="cpsm" />
  </S:Body>
</S:Envelope>
<soapenv:Envelope xmlns:soapenv="http://schemas.xmlsoap.org/soap/
 envelope/"
   xmlns:ver="http://www.multispeak.org/Version_4.1_Release">
  <soapenv:Header>
    <ver:MultiSpeakMsgHeader/>
  </soapenv:Header>
  <soapenv:Body>
    <ver:GetMethodsResponse>
      <ver:GetMethodsResult>
        <ver:string>PingURL</ver:string>
        <ver:string>GetMethods</ver:string>
        <ver:string>InitiateStatusReadByPointID</ver:string>
        <ver:string>InitiateAnalogReadByPointID</ver:string>
        <ver:string>InitiateControl</ver:string>
        <ver:string>GetAllSCADAStatus</ver:string>
        <ver:string>GetAllSCADAAnalogs</ver:string>
        <ver:string>GetAllSCADATags</ver:string>
      </ver:GetMethodsResult>
    </ver:GetMethodsResponse>
  </soapenv:Body>
</soapenv:Envelope>
```

GetAllSCADAStatus, GetAllSCADAAnalogs

The first synchronization method involves NMS invoking **GetAllSCADAStatus** and **GetAllSCADAAnalogs** operations to request the latest device statuses, digital and analog measurements from the SCADA. SCADA provides the requested information synchronously in the response message.

The MultiSpeak specification allows data to be returned in chunks by the SCADA system. In this case, NMS would have to make multiple **GetAllSCADAXXX** calls. The element lastReceived is included so that large sets of data can be returned in manageable blocks. **lastReceived** will carry an empty string the first time in a session that this method is invoked. When multiple calls to this method are required to obtain all of the data, the **lastReceived** should carry the objectID of the last data instance received in subsequent calls. If the **ObjectsRemaining** field is present in the MultiSpeak reply message's message header, it will be used to determine when all of the data has been received. If the **ObjectsRemaining** field is not present, the empty result set will signal the end of the data.

GetAllSCADAStatus Request and Response Example

```
<S:Envelope xmlns:S="http://schemas.xmlsoap.org/soap/envelope/">
  <S:Header>
    <ns4:MultiSpeakMsgHeader xmlns:ns4="http://www.multispeak.org/
      Version_4.1_Release"
      xmlns:ns3="cpsm"
      xmlns:ns2="http://www.w3.org/1999/xlink"
      xmlns:ns1="gml"
      Pwd="test" UserID="nms" />
  </S:Header>
  <S:Body>
    <ns4:GetAllSCADAStatus xmlns:ns4="http://www.multispeak.org/
      Version_4.1_Release"
      xmlns:ns3="cpsm"
      xmlns:ns2="http://www.w3.org/1999/xlink"
      xmlns:ns1="gml">
      <ns4:lastReceived></ns4:lastReceived>
    </ns4:GetAllSCADAStatus>
  </S:Body>
</S:Envelope>
<soapenv:Envelope xmlns:soapenv="http://schemas.xmlsoap.org/soap/
envelope/" xmlns:ver="http://www.multispeak.org/Version_4.1_Release"
 xmlns:cpsm="cpsm">
  <soapenv:Header>
    <ver:MultiSpeakMsgHeader  UserID="scada" Pwd="test"
         ObjectsRemaining="0"/>
  </soapenv:Header>
  <soapenv:Body>
    <ver:GetAllSCADAStatusResponse>
      <ver:GetAllSCADAStatusResult>
        <ver:scadaStatus>
          <ver:objectName>BR_R-2241</ver:objectName>
          <ver:quality>Initial</ver:quality>
          <ver:status>Open</ver:status>
          <ver:changeCounter>0</ver:changeCounter>
          <ver:timeStamp>2011-03-01T11:11:11</ver:timeStamp>
        </ver:scadaStatus>
      </ver:GetAllSCADAStatusResult>
    </ver:GetAllSCADAStatusResponse>
  </soapenv:Body>
</soapenv:Envelope>
```

GetAllSCADAAnalogs Request and Response Example

```
<S:Envelope xmlns:S="http://schemas.xmlsoap.org/soap/envelope/">
  <S:Header>
    <ns4:MultiSpeakMsgHeader xmlns:ns4="http://www.multispeak.org/
      Version_4.1_Release"
      xmlns:ns3="cpsm"
      xmlns:ns2="http://www.w3.org/1999/xlink"
      xmlns:ns1="gml"
```

```
      Pwd="test" UserID="nms" />
  </S:Header>
  <S:Body>
    <ns4:GetAllSCADAAnalogs xmlns:ns4="http://www.multispeak.org/
      Version_4.1_Release"
      xmlns:ns3="cpsm"
      xmlns:ns2="http://www.w3.org/1999/xlink"
      xmlns:ns1="gml">
      <ns4:lastReceived></ns4:lastReceived>
    </ns4:GetAllSCADAAnalogs>
  </S:Body>
</S:Envelope>
<soapenv:Envelope xmlns:soapenv="http://schemas.xmlsoap.org/soap/
envelope/" xmlns:ver="http://www.multispeak.org/Version_4.1_Release"
xmlns:cpsm="cpsm">
  <soapenv:Header>
    <ver:MultiSpeakMsgHeader UserID="scada" Pwd="test"
         ObjectsRemaining="0" />
  </soapenv:Header>
  <soapenv:Body>
    <ver:GetAllSCADAAnalogsResponse>
      <ver:GetAllSCADAAnalogsResult>
        <ver:scadaAnalog>
          <ver:objectName>BR_R-2241</ver:objectName>
          <ver:value units="Amps">260.78</ver:value>
          <ver:quality>Measured</ver:quality>
          <ver:timeStamp>2010-06-27T14:41:15-05:00</ver:timeStamp>
          <ver:measurementTypeID>Amps</ver:measurementTypeID>
        </ver:scadaAnalog>
        <ver:scadaAnalog>
          <ver:objectName>BR_R-2241</ver:objectName>
          <ver:value>0</ver:value>
          <ver:quality>Default</ver:quality>
          <ver:timeStamp>2010-06-27T14:41:15-05:00</ver:timeStamp>
         <ver:measurementTypeID>faultIndicator</ver:measurementTypeID>
        </ver:scadaAnalog>
      </ver:GetAllSCADAAnalogsResult>
    </ver:GetAllSCADAAnalogsResponse>
  </soapenv:Body>
</soapenv:Envelope>
```

GetAllSCADAAnalogs is used for both digital and analog measurements.

InitiateStatusReadByPointID, InitiateAnalogReadByPointID, Initiate-TagReadyByPointID

The second synchronization method uses **InitiateXXXReadByPointID** operations to request latest device statuses, tags, digital and analog measurements from the SCADA. SCADA provides requested information asynchronously by sending **XXXChangedNotificationByPointID** messages to NMS. To avoid having to send all SCADA points known to NMS an empty list of SCADA points can be used to indicate desire to initiate read for all SCADA points. Operation InitiateTagReadByPointID is not part of MultiSpeak 4.1 specification.

InitiateStatusReadByPointID and InitiateAnalogReadByPointID Request Examples

```
<S:Envelope xmlns:S="http://schemas.xmlsoap.org/soap/envelope/">
  <S:Header>
    <ns4:MultiSpeakMsgHeader
     xmlns:ns4="http://www.multispeak.org/Version_4.1_Release"
     xmlns:ns3="cpsm"
     xmlns:ns2="http://www.w3.org/1999/xlink"
```

```
      xmlns:ns1="gml"
      Pwd="test" UserID="nms" />
  </S:Header>
  <S:Body>
    <ns4:InitiateStatusReadByPointID
         xmlns:ns4="http://www.multispeak.org/Version_4.1_Release"
         xmlns:ns3="cpsm" xmlns:ns2="http://www.w3.org/1999/xlink"
         xmlns:ns1="gml">
      <ns4:pointIDs />
      <ns4:responseURL>https://nms-server:7002/nms-ms/oa
      </ns4:responseURL>
      <ns4:transactionID>1300163600187</ns4:transactionID>
      <ns4:expTime units="Hours">1.0</ns4:expTime>
    </ns4:InitiateStatusReadByPointID>
  </S:Body>
</S:Envelope>
<S:Envelope xmlns:S="http://schemas.xmlsoap.org/soap/envelope/">
  <S:Header>
    <ns4:MultiSpeakMsgHeader xmlns:ns4="http://www.multispeak.org/
         Version_4.1_Release"
         xmlns:ns3="cpsm" xmlns:ns2="http://www.w3.org/1999/xlink"
         xmlns:ns1="gml"
         Pwd="test" UserID="nms" />
  </S:Header>
  <S:Body>
    <ns4:InitiateAnalogReadByPointID
           xmlns:ns4="http://www.multispeak.org/Version_4.1_Release"
xmlns:ns3="cpsm"
           xmlns:ns2="http://www.w3.org/1999/xlink" xmlns:ns1="gml">
      <ns4:pointIDs />
      <ns4:responseURL>https://nms-server:7002/nms-ms/oa</
ns4:responseURL>
      <ns4:transactionID>1300163600203</ns4:transactionID>
      <ns4:expTime units="Hours">1.0</ns4:expTime>
    </ns4:InitiateAnalogReadByPointID>
  </S:Body>
</S:Envelope>
```

GetAllSCADATags

Synchronization of tag information is done using **GetAllSCADATags** operation (not part of MultiSpeak 4.1). The expectation is that SCADA systems would return information about all currently applied tags. NMS compares information received from SCADA against tags currently present in the model and make necessary adjustments (adding or removing tags).

GetAllSCADATags request and Response Example

```
<S:Envelope xmlns:S="http://schemas.xmlsoap.org/soap/envelope/">
  <S:Header>
    <ns4:MultiSpeakMsgHeader xmlns:ns4="http://www.multispeak.org/
     Version_4.1_Release"
     xmlns:ns3="cpsm"
     xmlns:ns2="http://www.w3.org/1999/xlink"
     xmlns:ns1="gml"
     Pwd="test" UserID="nms" />
  </S:Header>
  <S:Body>
    <ns4:GetAllSCADATags xmlns:ns4="http://www.multispeak.org/
     Version_4.1_Release"
     xmlns:ns3="cpsm"
     xmlns:ns2="http://www.w3.org/1999/xlink"
     xmlns:ns1="gml">
     <ns4:lastReceived></ns4:lastReceived>
```

```
    </ns4:GetAllSCADATags>
  </S:Body>
</S:Envelope>
<soapenv:Envelope xmlns:soapenv="http://schemas.xmlsoap.org/soap/
envelope/"
         xmlns:ver="http://www.multispeak.org/Version_4.1_Release"
         xmlns:cpsm="cpsm">
  <soapenv:Header>
    <ver:MultiSpeakMsgHeader  UserID="scada" Pwd="test"
         ObjectsRemaining="0"/>
  </soapenv:Header>
  <soapenv:Body>
    <ver:GetAllSCADATagsResponse>
      <ver:GetAllSCADATagsResult>
        <ver:scadaTag objectID="scada-tag-1" verb="Change">
          <ver:tagType>Hold</ver:tagType>
          <ver:scadaPointID>BR2422</ver:scadaPointID>
          <ver:username>scada</ver:username>
          <ver:comment>test tag</ver:comment>
          <ver:timeStamp>2011-07-19T14:12:31.859-05:00</ver:timeStamp>
        </ver:scadaTag>
      </ver:GetAllSCADATagsResult>
    </ver:GetAllSCADATagsResponse>
  </soapenv:Body></soapenv:Envelope>
```

Controls

NMS can use the same operation (**InitiateControl**) to request device operation and to request placement or removal of a tag. The **InitiateControl** message consists of a single controlAction object.

The following **InitiateControl** fields are used:

- controlAction/scadaPointID – SCADA point ID;
- controlAction/controlKey – SCADA-specific value indicating requested operation (open/close device, place/remove tag);
- controlAction/desiredValue – the desired value of the SCADA point being controlled (for example, transformer tap setting);
- controlAction/userName - username of the NMS user who initiated the control request
- transactionID – unique value associated with the control request;
- responseURL – URL of NMS web service, which should be used to report outcome of the requested control action.

  Notes:

  - Field `function` is required, but NMS does not use it. It is always populated with the value `Direct operate`.
  - Field `relayType` is required, but NMS does not use it. It is always populated with the value `Normal`.
  - NMS will not issue separate select and operate commands.
  - The `desiredValue` and `userName` fields are not part of the MultiSpeak 4.1 specification. The SCADA system needs to be aware of this Oracle-specific extension.
  - The `userName` field is only populated by the OsiScada plugin.

InitiateControl Request Example

```
<soapenv:Envelope xmlns:soapenv=http://schemas.xmlsoap.org/soap/
envelope/
    xmlns:ver="http://www.multispeak.org/Version_4.1_Release">
  <soapenv:Header>
    <ver:MultiSpeakMsgHeader UserID="nms" Pwd="test" TimeStamp="2011-
03-19T20:04:37"/>
  </soapenv:Header>
  <soapenv:Body>
    <ver:InitiateControl>
      <ver:controlAction>
        <ver:scadaPointID>BR_R-2241</ver:scadaPointID>
        <ver:controlKey>open</ver:controlKey>
        <ver:function>Direct operate</ver:function>
        <ver:relayType>Normal</ver:relayType>
      </ver:controlAction>
      <ver:responseURL>https://nms-server:7002/nms-ms/oa</
ver:responseURL>
      <ver:transactionID>12345</ver:transactionID>
    </ver:InitiateControl>
  </soapenv:Body>
</soapenv:Envelope>
```

Operating a SCADA-Controlled Device

1. NMS user instructs open of a SCADA-controlled device.
2. Instructed flag is placed on the device in NMS. The device remains closed in NMS model.
3. NMS sends **InitiateControl** message to the SCADA system.
4. If requested control action has been successfully executed then:
   a. SCADA sends **SCADAStatusChangedNotification** with the new status of the operated device
   b. NMS updates device status in the model and removes Instructed flag
5. Regardless of the outcome of the requested control action
   a. SCADA sends **ControlActionCompleted** message to indicate whether requested control action was successful or not
   b. In case of negative outcome NMS removes Instructed flag. Device status remains unchanged.

      Note: When SCADA sends **ControlActionCompleted** message to NMS in case of success NMS will not update device status in its model until **SCADAStatusChangedNotification** message has been received.

Placing or Removing a Tag on a SCADA-Controlled Device

1. NMS user instructs placement of a **HOLD** tag on a SCADA-controlled device.
2. Instructed flag is placed on the device in NMS. The device remains closed in the NMS model.
3. NMS sends **InitiateControl** message to the SCADA system.
4. If requested control action has been successfully executed then:
   a. SCADA sends **SCADATagChangedNotification** with the new status of the operated device.

   b. NMS updates device status in the model and removes Instructed flag.

5. If requested control action has NOT been successfully executed then:

   a. SCADA sends **ControlActionCompleted** message to indicate that requested control action has not been executed.

   b. NMS removes Instructed flag, device status remains unchanged.

      Note: SCADA can send **ControlActionCompleted** message to NMS in case of success, but NMS will not update tag information in its model until **SCADATagChangedNotification** message has been received.

Outgoing Device Statuses

If SCADA system has knowledge of the NMS electrical model, then the adapter can be configured to send device status information for devices in the NMS model to the SCADA system.

The SCADA system plugin method **buildScadaPointId** is used to construct SCADA point id for NMS devices. The version of the buildScadaPointId method accepting the scadaPointId parameter is used here.

SCADAStatusChangedNotification

Sends NMS device status changes to SCADA system.

If support for pending construction devices is enabled then boolean extension item named 'PENDING_CONSTRUCTION' is used to indicate pending construction status of the NMS device.

Example of a message to SCADA system when a device in NMS has been commissioned (this means that the device is no longer pending construction therefore the value of the extension item is false).

```
<ns4:SCADAStatusChangedNotification xmlns:ns4="http://
www.multispeak.org/Version_4.1_Release">
  <ns4:scadaStatuses>
    <ns4:scadaStatus objectID="148.1345#C">
      <ns4:extensionsList>
        <ns4:extensionsItem>
          <ns4:extName>PENDING_CONSTRUCTION</ns4:extName>
          <ns4:extValue>false</ns4:extValue>
          <ns4:extType>boolean</ns4:extType>
        </ns4:extensionsItem>
      </ns4:extensionsList>
      <ns4:status>Open</ns4:status>
    <ns4:changeCounter>0</ns4:changeCounter>
  </ns4:scadaStatus>
  </ns4:scadaStatuses>
</ns4:SCADAStatusChangedNotification>
```

StatusChangedNotificationByPointID

Sends NMS device status information to SCADA system in response to **InitiateStatusReadByPointID** request. NMS only returns information for devices which are not in the nominal state to reduce volume of data.

Outgoing Tags and Other Conditions

If SCADA system has knowledge of the NMS electrical model, then the adapter can be configured to send information about tags and other conditions (for example, notes) in the NMS model to the SCADA system.

The SCADA system plugin method **buildScadaPointId** is used to construct SCADA point id associated with NMS tag/condition. The version of the buildScadaPointId method accepting the scadaPointId parameter is used here.

The SCADA system plugin methods **setTagHandle**, **setTagId**, **setTagType**, **setUserName**, **setScadaPointId**, **setAction**, and **setTagData** are used to populate the outgoing tag update messages.

SCADATagChangedNotification

Sends changes to NMS tags and other conditions to SCADA system.

This operation is vendor extension to the MultiSpeak 4.1 specification.

TagChangedNotificationByPointID

Sends information about NMS tags and other conditions to SCADA system in response to **InitiateTagReadByPointID** request.

This operation is vendor extension to the MultiSpeak 4.1 specification.

Both SCADATagChangedNotification and TagChangedNotificationByPointID messages contain sequence of ScadaTag objects. The following ScadaTag fields are used by the default SCADA system plugin implementation:

- @objectID - NMS condition handle
- tagID - NMS condition external id
- scadaPointID - SCADA point id
- @verb = action (New - condition placed; Change - condition update; Delete - condition removed)
- tagType - SCADA tag type
- username - NMS operator username
- tagReason - condition text
- tagInsertionTime - condition creation timestamp

The "safety" extension item in the ScadaTag object can be populated with the safety information associated with the given tag or condition. Safety information is taken from the "safety_info" attribute of the NMS condition. The data type of this extension item is "string". Only the OsiScada plugin populates the "safety" extension item.

Display Integration

HighlightObjectInDisplay

This message causes SCADA system to focus display on a particular SCADA point.

SCADA to NMS

Supported Operations

PingURL

SCADA system can use **PingURL** operation to verify that NMS is operational.

GetMethods

SCADA system can use **GetMethods** operation to determine operations supported by NMS.

SCADAAnalogChangedNotification

SCADA system can use this operation to report that analog or digital measurement(s) has changed. The message consists of an array of **scadaAnalog** objects.

The following **scadaAnalog** fields should be used (XPath notation is used):

- @objectID or objectName - SCADA point ID;
- measurementTypeID - measurement type (used to determine NMS attribute);
- value - measurement value and units;
- quality - quality code associated with the measurement;
- timeStamp - measurement timestamp.

Note: If SCADA point ID uniquely identifies the measurement then the **measurementTypeID** field can be omitted.

Possible Error Conditions

- Unknown SCADA system;
- Unknown SCADA point id;
- Unable to map measurement to NMS attribute;
- Empty measurement value.

SCADAAnalogChangedNotification Example

- Sets Amps attribute to 260.78 and turns off faultIndicator for device BR_R-2241.

```
<soapenv:Envelope xmlns:soapenv="http://schemas.xmlsoap.org/soap/
envelope/"
      xmlns:ver="http://www.multispeak.org/Version_4.1_Release"
      xmlns:cpsm="cpsm">
  <soapenv:Header>
    <ver:MultiSpeakMsgHeader UserID="nms" Pwd="test"/>
  </soapenv:Header>
  <soapenv:Body>
    <ver:SCADAAnalogChangedNotification>
      <ver:scadaAnalogs>
        <ver:scadaAnalog>
          <ver:objectName>BR_R-2241</ver:objectName>
          <ver:value units="Amps">260.78</ver:value>
          <ver:quality>Measured</ver:quality>
          <ver:timeStamp>2010-06-27T14:41:15-05:00</ver:timeStamp>
          <ver:measurementTypeID>Amps</ver:measurementTypeID>
        </ver:scadaAnalog>
        <ver:scadaAnalog>
          <ver:objectName>BR_R-2241</ver:objectName>
          <ver:value>0</ver:value>
          <ver:quality>Measured</ver:quality>
          <ver:timeStamp>2010-06-27T14:41:15-05:00</ver:timeStamp>
         <ver:measurementTypeID>faultIndicator</ver:measurementTypeID>
        </ver:scadaAnalog>
      </ver:scadaAnalogs>
    </ver:SCADAAnalogChangedNotification>
  </soapenv:Body>
</soapenv:Envelope>
```

SCADAAnalogChangedNotificationByPointID

The SCADA system can use this operation to report that an analog or digital measurement has changed. The message consists of a single **scadaAnalog** object.

The following **scadaAnalog** fields should be used:

- @objectID or objectName - SCADA point ID;
- measurementTypeID - measurement type (used to determine NMS attribute);
- value - measurement value and units;
- quality - quality code associated with the measurement;
- timeStamp - measurement timestamp.

Possible Error Conditions

- Unknown SCADA system;

- Unknown SCADA point id;
- Unable to map measurement to NMS attribute;
- Empty measurement value.

AnalogChangedNotificationByPointID

This operation is used by SCADA system to respond to the InitiateAnalogReadByPointID request made by NMS.

- The message format is the same as **SCADAAnalogChangedNotification** with one additional field '**transactionID**'.
- Its value has to match the value of the '**transactionID**' field in the **InitiateAnalogReadByPointID** message the SCADA system is responding to.

SCADAStatusChangedNotification

The SCADA system will use this operation to report that one or more devices have changed status. The message consists of an array of **scadaStatus** objects.

The following **scadaStatus** fields should be used:

- @objectID or objectName - SCADA point ID;
- status - SCADA device status (Open/Closed);
- quality - quality code associated with the status update;
- changeCounter - number of device status changes since the last report;
- timeStamp - device operation timestamp.

Possible Error Conditions

- Unknown SCADA system;
- Unknown SCADA point id;
- Invalid status value.

SCADAStatusChangedNotification Examples

1. **Opens device BR_R-2241**

```
<soapenv:Envelope xmlns:soapenv="http://schemas.xmlsoap.org/soap/
envelope/"
    xmlns:ver="http://www.multispeak.org/Version_4.1_Release"
    xmlns:cpsm="cpsm">
  <soapenv:Header>
    <ver:MultiSpeakMsgHeader UserID="nms" Pwd="test"/>
  </soapenv:Header>
  <soapenv:Body>
    <ver:SCADAStatusChangedNotification>
      <ver:scadaStatuses>
        <ver:scadaStatus>
          <ver:objectName>BR_R-2241</ver:objectName>
          <ver:quality>Measured</ver:quality>
          <ver:status>Open</ver:status>
          <ver:changeCounter>1</ver:changeCounter>
          <ver:timeStamp>2011-03-04T11:44:10</ver:timeStamp>
        </ver:scadaStatus>
      </ver:scadaStatuses>
    </ver:SCADAStatusChangedNotification>
```

```
  </soapenv:Body>
</soapenv:Envelope>
```

2. **Closes device BR_R-2241**

```
<soapenv:Envelope xmlns:soapenv="http://schemas.xmlsoap.org/soap/
envelope/"
    xmlns:ver="http://www.multispeak.org/Version_4.1_Release"
    xmlns:cpsm="cpsm">
  <soapenv:Header>
    <ver:MultiSpeakMsgHeader UserID="nms" Pwd="test"/>
  </soapenv:Header>
  <soapenv:Body>
    <ver:SCADAStatusChangedNotification>
      <ver:scadaStatuses>
        <ver:scadaStatus>
          <ver:objectName>BR_R-2241</ver:objectName>
          <ver:quality>Measured</ver:quality>
          <ver:status>Closed</ver:status>
          <ver:changeCounter>1</ver:changeCounter>
          <ver:timeStamp>2011-03-04T11:44:10</ver:timeStamp>
        </ver:scadaStatus>
      </ver:scadaStatuses>
    </ver:SCADAStatusChangedNotification>
  </soapenv:Body>
</soapenv:Envelope>
```

SCADAStatusChangedNotificationByPointID

The SCADA system can use this operation to report that the status of a device has changed. The message consists of a single **scadaStatus** object.

The following **scadaStatus** fields should be used:

- @objectID or objectName - SCADA point ID;
- status - SCADA device status (Open/Closed);
- quality - quality code associated with the status update;
- changeCounter - number of device status changes since the last report;
- timeStamp - device operation timestamp.

Possible Error Conditions

- Unknown SCADA system;
- Unknown SCADA point id;
- Invalid status value.

StatusChangedNotificationByPointID

This operation is used by the SCADA system to respond to the **InitiateStatusReadByPointID** request made by NMS.

- Message format is the same as **SCADAStatusChangedNotification** with one additional field '**transactionID**'.
- Its value has to match value of the '**transactionID**' field in the **InitiateStatusReadByPointID** message the SCADA system is responding to.

SCADATagChangedNotification

The SCADA system can use this operation to report that there has been a change in tag(s) placed on devices in the SCADA system. The message consists of an array of **scadaTag** objects.

The following **scadaTag** fields should be used:

- @objectID - SCADA tag identifier;
- scadaPointID - SCADA point id;
- @verb - action (New/Change/Delete);
- tagType - SCADA tag type;
- username - SCADA operator's user name;
- comment - tag comments, notes;
- timeStamp - tag operation timestamp.

Possible error conditions:

- Unknown SCADA system;
- Unknown SCADA point id;
- Invalid tag type;
- Unsupported action.

This operation is vendor extension to the MultiSpeak 4.1 specification.

SCADATagChangedNotification Examples

1. Place HOLD tag on device BR2422

```
<soapenv:Envelope xmlns:soapenv="http://schemas.xmlsoap.org/soap/
envelope/"
    xmlns:ver="http://www.multispeak.org/Version_4.1_Release"
    xmlns:cpsm="cpsm">
  <soapenv:Header>
    <ver:MultiSpeakMsgHeader UserID="nms" Pwd="test"/>
  </soapenv:Header>
  <soapenv:Body>
    <ver:SCADATagChangedNotification>
       <ver:scadaTags>
          <ver:scadaTag objectID="scada-tag-1" verb="New">
             <ver:tagType>Hold</ver:tagType>
             <ver:scadaPointID>BR2422</ver:scadaPointID>
             <ver:username>scada</ver:username>
             <ver:comment>test tag</ver:comment>
             <ver:timeStamp>2011-07-19T14:12:31.859-05:00</
ver:timeStamp>
          </ver:scadaTag>
       </ver:scadaTags>
    </ver:SCADATagChangedNotification>
  </soapenv:Body>
</soapenv:Envelope>
```

2. Update HOLD tag on device BR2422

```
<soapenv:Envelope xmlns:soapenv="http://schemas.xmlsoap.org/soap/
envelope/"
    xmlns:ver="http://www.multispeak.org/Version_4.1_Release"
    xmlns:cpsm="cpsm">
  <soapenv:Header>
```

```
    <ver:MultiSpeakMsgHeader UserID="nms" Pwd="test"/>
  </soapenv:Header>
  <soapenv:Body>
    <ver:SCADATagChangedNotification>
       <ver:scadaTags>
          <ver:scadaTag objectID="scada-tag-1" verb="Change">
             <ver:tagType>Hold</ver:tagType>
             <ver:scadaPointID>BR2422</ver:scadaPointID>
             <ver:username>scada2</ver:username>
             <ver:comment>updated test tag</ver:comment>
             <ver:timeStamp>2011-07-19T14:13:31.859-05:00
             </ver:timeStamp>
          </ver:scadaTag>
       </ver:scadaTags>
    </ver:SCADATagChangedNotification>
  </soapenv:Body>
</soapenv:Envelope>
```

3. Remove HOLD tag from device BR2422

```
<soapenv:Envelope xmlns:soapenv="http://schemas.xmlsoap.org/soap/
envelope/"
    xmlns:ver="http://www.multispeak.org/Version_4.1_Release"
    xmlns:cpsm="cpsm">
  <soapenv:Header>
    <ver:MultiSpeakMsgHeader UserID="nms" Pwd="test"/>
  </soapenv:Header>
  <soapenv:Body>
    <ver:SCADATagChangedNotification>
       <ver:scadaTags>
          <ver:scadaTag objectID="scada-tag-1" verb="Delete">
             <ver:tagType>Hold</ver:tagType>
             <ver:scadaPointID>BR2422</ver:scadaPointID>
             <ver:username>scada</ver:username>
             <ver:comment>updated test tag</ver:comment>
             <ver:timeStamp>2011-07-19T14:14:31.859-05:00
             </ver:timeStamp>
          </ver:scadaTag>
       </ver:scadaTags>
    </ver:SCADATagChangedNotification>
  </soapenv:Body>
</soapenv:Envelope>
```

TagChangedNotificationByPointID

This operation is used by the SCADA system to respond to the **InitiateTagReadByPointID** request made by NMS.

- The message format is the same as **SCADATagChangedNotification** with one additional field '**transactionID**'.
- Its value has to match value of the '**transactionID**' field in the **InitiateTagReadByPointID** message SCADA system is responding to.
- This operation is vendor extension to the MultiSpeak 4.1 specification.

ControlActionCompleted

The SCADA system can use this operation to report to NMS the outcome of a control action requested by the **InitiateControl** operation. The message consists of a single of **scadaControl** object. In case of successful control action field, the **controlStatus** should contain value "Control accepted." Any other value is interpreted as control failure.

ControlActionCompleted Example

```
<soapenv:Envelope xmlns:soapenv="http://schemas.xmlsoap.org/soap/
envelope/" xmlns:ver="http://www.multispeak.org/Version_4.1_Release">
   <soapenv:Header>
      <ver:MultiSpeakMsgHeader UserID="scada" Pwd="test"/>
   </soapenv:Header>
   <soapenv:Body>
      <ver:ControlActionCompleted>
         <ver:controlAction>
            <ver:scadaPointID>BR2422</ver:scadaPointID>
             <ver:function>Direct operate</ver:function>
             <ver:relayType>Normal</ver:relayType>
             <ver:controlStatus>Control accepted</ver:controlStatus>
         </ver:controlAction>
         <ver:transactionID>12345</ver:transactionID>
      </ver:ControlActionCompleted>
   </soapenv:Body>
</soapenv:Envelope>
```

VoltageAlarmNotification

The SCADA system can use this operation to report alarms to NMS. The message consists of an array of voltageAlarm objects.

The following **voltageAlarm** fields should be used:

- @objectID - SCADA alarm identifier;
- sourceIdentifier - SCADA point id;
- sourceIdentifier/@name - attribute name;
- @verb - action (only New is allowed);
- @errorString - alarm description;
- comments - alarm description;
- eventTime - SCADA alarm timestamp;
- voltageAlarmList/voltageAlarmItem[1]/voltageValue - SCADA measurement value, which caused the alarm;
- voltageAlarmList/voltageAlarmItem[1]/quality - SCADA quality code;
- voltageAlarmList/voltageAlarmItem[1]/analogCondition - SCADA limit violation;
- voltageAlarmList/voltageAlarmItem[1]/phaseCode - SCADA alarm phases.

For alarms SCADA quality code is passed "as-is." Configured quality code mapping rules are not applied in this case.

Possible error conditions:

- Unknown SCADA system;
- Unknown SCADA point id;
- Unsupported action.

VoltageAlarmNotification Example

```
<soapenv:Envelope xmlns:soapenv="http://schemas.xmlsoap.org/soap/
envelope/" xmlns:ver="http://www.multispeak.org/Version_4.1_Release"
xmlns:cpsm="cpsm">
   <soapenv:Header>
      <ver:MultiSpeakMsgHeader UserID="nms1" Pwd="systems"/>
```

```
   </soapenv:Header>
   <soapenv:Body>
      <ver:VoltageAlarmNotification>
         <ver:alarms>
            <ver:voltageAlarm objectID="alarm-1" verb="New"
                 errorString="alarm test">
               <ver:comments>comment</ver:comments>
               <ver:sourceIdentifier name="Volts">BR2422
               </ver:sourceIdentifier>
               <ver:eventTime>2011-05-11T10:05:25.484-05:00
               </ver:eventTime>
               <ver:voltageAlarmList>
                  <ver:voltageAlarmItem>
                    <ver:voltageValue units="V">100</ver:voltageValue>
                     <ver:quality>Measured</ver:quality>
                     <ver:analogCondition>H1</ver:analogCondition>
                     <ver:phaseCode>BC</ver:phaseCode>
                  </ver:voltageAlarmItem>
               </ver:voltageAlarmList>
             </ver:voltageAlarm>
         </ver:alarms>
      </ver:VoltageAlarmNotification>
   </soapenv:Body>
</soapenv:Envelope>
```

InitiateStatusReadByPointID

Initiates process of sending device status information from NMS to SCADA as series of **StatusChangedNotificationByPointID** messages.

InitiateTagReadByPointID

Initiates process of sending tag/condition information from NMS to SCADA as series of TagChangedNotificationByPointID messages.

The following message fields should be used:

- responseURL - web service URL where NMS should send TagChangedNotificationByPointID messages with response data (not used in case of JMS transport)
- transactionID - request transaction ID (all TagChangedNotificationByPointID messages sent in response to this request will contain the specified transaction ID)

HighlightObjectInDisplay

Causes NMS viewer to focus on given SCADA point. Viewer window has to be open (this message does not open viewer window).

GetAllSCADAPoints

SCADA system can retrieve list of SCADA points configured in NMS for that particular SCADA system using the **GetAllSCADAPoints** MultiSpeak operation. The information is returned synchronously.

The MultiSpeak specification allows data to be returned in chunks to the SCADA system. In this case, SCADA would have to make multiple **GetAllSCADAPoints** calls. The element **lastReceived** is included so that large sets of data can be returned in manageable blocks. **lastReceived** must carry an empty string the first time in a sequence of calls. When multiple calls to this method are required to obtain all of the data, the **lastReceived** should carry the objectID of the last data instance received by previous call. The **ObjectsRemaining** field in the MultiSpeak header of the reply message is set to 0 in the last response; otherwise, it is set to the number of remaining SCADA points. The LastSent field

in the MultiSpeak header of the reply message is set to last SCADA point id sent in this block (it can be used to populate the **lastReceived** parameter in the next request).

MultiSpeak Message Header

The attributes **UserID** and **Pwd** in the MultiSpeak message header are used for authentication unless Basic HTTP Authentication is used. When used for authentication, these attributes should be populated with valid NMS credentials for all messages coming to NMS with exception of **PingURL** and **GetMethods**. When Basic HTTP Authentication is used, the attribute **Pwd** should be either empty or omitted.

The attribute **UserID** is also used to determine the SCADA system the message originated from. It is checked against the names of the known SCADA systems in the SCADA_IDS database table. If the adapter is configured to communicate with a single SCADA system and the configuration parameter **config.strict_scada_name_check** is set to **false**, then SCADA name check is skipped.

Software Configuration

Configuration for the Oracle Utilities Network Management System MultiSpeak Adapter comes from the following sources:

- CES_PARAMETERS database table;
- SCADA_IDS database table;
- SCADA_LINKS database table;
- SCADA_LINK_OPS database table;
- SCADA_SYNONYMS database table.

CES_PARAMETERS

Entries in the CES_PARAMETERS database table for the SCADA component of the Oracle Utilities Network Management System MultiSpeak Adapter should have the value **SCADAInterface** in the APP column. Column **ATTRIB** should contain the name of the configuration parameter and column VALUE its value. See Overriding Configuration Parameters on page 11-15 for more information.

Common Configuration Parameters

The following table describes the common configuration parameters.

Parameter	Description
config.credentials	Absolute path to the file containing user credentials the adapter will use to communicate with Oracle Utilities Network Management System. Either this parameter or both config.username and config.password parameters should be provided. If all are present then config.username/config.password pair is used.
config.enabled	Enables SCADA processing. **Default:** false

Parameter	Description
config.message_credentials_required	If this parameter is set to false then credentials for authenticating with NMS are taken from the MultiSpeak header of the incoming message. If this parameter is set to false and credentials are not present in the MultiSpeak header of the incoming message then username and password configured in the adapter is used to authenticate with NMS. **Valid Values:** true|false. **Default:** true
config.password	NMS user password. Value of this parameter should be encrypted.
config.nms_url	URL for accessing Oracle Utilities Network Management System. If this parameter is not provided then it is assumed that MultiSpeak Adapter is deployed on the same Managed Server as cesejb.ear. This parameter is specified for each component of the adapter, but only one value is actually used; all components will connect to the same NMS instance. The value is taken from the first enabled component according to the following order of precedence: 1. SCADA 2. AMR 3. AVL Note: This parameter replaces the Foreign JNDI configuration used in earlier versions of the Adapter.
config.strict_scada_name_check	SCADA name validation. If set to 'false' and only one SCADA system is configured for the MultiSpeak Adapter in the SCADA_IDS database table then SCADA name check is skipped. Otherwise field UserID in the MultiSpeak message header or username of the web services caller (if UserID is empty) is matched against the values in the SCADA_NAME field in the SCADA_IDS database table. Request is rejected if matched value is not found. **Default:** true
config.username	Valid NMS username, which has the 'NmsService' role in WebLogic Server.

Per SCADA System Configuration Parameters

The following configuration parameters are configured individually for each SCADA system the adapter is communicating with. Names of such parameters are prefixed with the name of the SCADA system they apply to (value from the **SCADA_NAME** column in the SCADA_IDS table).

Authentication with the SCADA System

The SCADA component of the Oracle Utilities Network Management System MultiSpeak Adapter passes credentials to the SCADA system in the UserID and Pwd fields of the MultiSpeak message header.

Parameter	Description
<scada name>.headers.UserID	Username to be passed to the SCADA system.
<scada name>.headers.Pwd	Password to be passed to the SCADA system.

Note: Other MultiSpeak message header fields can be set by using desired field name in the parameter name.

JNDI Name for JMS Connection Factory

When JMS transport is used this parameter defines JNDI name of the JMS connection factory used for NMS to SCADA data flows.

Parameter	Description
<scada name>.jms_cf_name	JNDI name of the JMS connection factory which should be used for NMS to SCADA data flows. **Default:** ConnectionFactory

JMS Connection Credentials

These parameters are used if credentials are required to establish connection to JMS server. They are passed to the createConnection method of JMS connection factory.

Parameter	Description
<scada name>.jms_user	JMS connection username.
<scada name>.jms_password	JMS connection password.

SCADA System Plugin Class

Plugin class is a Java class, which encapsulates functionality of the adapter, which is specific to a particular SCADA system.

Parameter	Description
<scada name>.plugin_class	Full name of the Java class implementing ScadaSystemPlugin interface for the SCADA system the adapter is connected to. **Default:** com.splwg.oms.interfaces.scada.plugins.GenericScada

Support for Tags

These parameters control tag-related data flows.

Parameter	Description
<scada name>.support_tags	Enable/disable support for incoming tags. **Default:** false (incoming tags are not supported)

Parameter	Description
<scada name>.outgoing_tag.class.<idx>	Names of the NMS condition classes for which updates should be sent to the SCADA system. This applies to the children of the configured classes as well.
<scada name>.outgoing_tag.block_size	Block size for the outgoing condition messages. **Default:** 10
<scada name>.outgoing_tag.only_scada	Only send outgoing tag messages for SCADA devices. If set to 'true' only tags on SCADA devices will be reported to SCADA; otherwise, tags on all devices are reported. **Default:** false
<scada name>.outgoing_tag.add_gang_point	When tag is placed on a phase-operable device send outgoing tag message for the point representing all device phases. This message is sent in addition to the messages for points representing individual tagged phases which are always sent. **Default:** false

<idx> - suffix used to make parameter name unique; any value can be used as long as resulting configuration parameter name is unique.

Synchronization Sequence Timeout

This parameter limits how long synchronization sequence can last. If this value is exceeded then link failure is declared.

Parameter	Description
<scada name>.sync_timeout	Maximum allowed duration (in seconds) of synchronization sequence. **Default:** 3600

Automatic Synchronization of Measurements Values

SCADA systems can have large number of analog measurements and synchronizing those can be a lengthy task. This configuration parameter allows analog measurements to be excluded from automated synchronization sequence, which is executed when connection to SCADA system is established.

It is always possible to manually trigger synchronization of analog measurements regardless of the value of this parameter.

Parameter	Description
<scada name>.sync_analogs	Include measurement values into automated synchronization sequence. **Default:** true

Adapter Status Alarm Messages

NMS MultiSpeak adapter can generate system alarms to alert NMS operator about following conditions:

- Adapter has been started

- Adapter has been stopped
- Connection to SCADA system has been established
- Connection to SCADA system has failed
- Synchronization sequence has finished

Parameter	Description
<scada name>.msg.started	Text of the alarm generated when adapter has been started.
<scada name>.msg.stopped	Text of the alarm generated when adapter has been stopped.
<scada name>.msg.established	Text of the alarm generated when connection to SCADA system has been established.
<scada name>.msg.failed	Text of the alarm generated when connection to SCADA system has failed.
<scada name>.msg.synchronized	Text of the alarm generated when synchronization sequence has finished.

If alarm text is not configured then corresponding alarm will not be generated.

Dynamic SCADA Point Configuration

When SCADA system has knowledge of NMS device aliases or device handles it is possible to have process of SCADA point configuration to be performed by the adapter as part of integrity check. New SCADA points are added to the database tables ANALOG_MEASUREMENTS, DIGITAL_MEASUREMENTS and SCADA_MEASUREMENTS_ST. Orphaned SCADA points can be removed from the SCADA_MEASUREMENTS_ST database table.

No additional actions are required for new SCADA points to take effect (users may have to refresh SCADA Summary to see new points). Command 'UpdateDDS -recacheMeasures' need to be executed to propagate record deletions to runtime tables (ANALOG_MEASUREMENTS and DIGITAL_MEASUREMENTS).

In order for dynamic SCADA point configuration to be possible SCADA system plugin must implement `buildScadaPointId` and `parseScadaPointId` methods.

Parameter	Description
<scada name>.dynamic_point_config	Dynamic SCADA point configuration support. **Valid values:** • `full` – dynamic addition and removal of SCADA points is supported • `add` – only dynamic addition of SCADA points is supported • `none` – not supported **Default:** none.

Sending Device Status Information from NMS to SCADA

The adapter can be configured to send NMS device status information to SCADA system. List of NMS devices classes has to be configured to enable this functionality (<scada name>.outgoing_status.class.<idx> parameter).

Class inheritance is taken into account so if a device class is configured to have status changes to be sent to SCADA system then status changes for all the child classes would also be sent out.

For conductors quality value in the outgoing message is set to Other. In all other cases quality value is not set.

Status information for inline jumpers is reported as status on the underlying conductor.

Point-to-point jumpers are not supported.

Parameter	Description
<scada name>.outgoing_status.class.<idx>	Device classes for which status information should be sent to SCADA system.
<scada name>.outgoing_status.block_size	Block size for outgoing device status messages. Default: 10
<scada name>.outgoing_status.allow_scada	Allow device status updates for SCADA devices to be sent to the SCADA system. This is disabled by default because SCADA system is the master for the information about SCADA devices. Default: false
<scada name>.outgoing_status.allow_pending_construction	Allow device status updates for pending construction devices as well as changes in pending construction status of devices to be sent to the SCADA system. Default: false
<scada name>.conductor.class.<idx>	NMS conductor device classes.
<scada name>.jumper.class.<idx>	NMS jumper device classes.

<idx> - suffix used to make parameter name unique; any value can be used as long as resulting configuration parameter name is unique.

Synchronization Method

The SCADA component of the Oracle Utilities Network Management System MultiSpeak Adapter supports two methods of synchronizing device statuses and measurements with the SCADA system: synchronous and asynchronous.

Parameter	Description
<scada name>.preferred_sync_method	Preferred method of synchronization with the SCADA system. **Valid values:** • sync – synchronous • async - asynchronous **Default:** async.

Parameter	Description
<scada name>.need_sync_points	Whether full list of SCADA points known to NMS should be sent to SCADA during synchronization process. Only applicable when preferred_sync_method is *async*. **Valid Values:** true|false **Default:** false

SOAP Protocol Version

Oracle Utilities Network Management System MultiSpeak Adapter can use SOAP protocol versions 1.1 or 1.2.

Parameter	Description
<scada name>.soap12	Whether SOAP 1.2 should be used. **Valid Values:** • **true:** use SOAP 1.2. • **false:** use SOAP 1.1 **Default:** false

Outbound Controls

The SCADA component of the Oracle Utilities Network Management System MultiSpeak Adapter supports sending control requests to the SCADA system.

Parameter	Description
<scada name>.allow_controls	Whether control requests should be sent to SCADA. Valid values: true/false **Default:** false (controls are not allowed)
<scada name>.allow_multiphase_controls	Allows sending of a single control request when all phases of a phase-operable device are operated. **Default:** false (for phase-operable devices, a separate control request is sent for each phase).

Heartbeat Interval

The SCADA component of the Oracle Utilities Network Management System MultiSpeak Adapter periodically sends **PingURL** message to the SCADA system to check status of the link. Heartbeat failure causes adapter to switch to alternate link (if available).

Parameter	Description
<scada name>.heartbeat_interval	Interval in seconds between heartbeat messages. **Default:** 60 seconds

Support for Operating Non-SCADA Devices in the NMS Model

If set to 'true' this configuration parameter allows SCADA system to operate devices, which are not SCADA-telemetered, in NMS model. For this to be possible the adapter must be able to derive NMS device handle from SCADA point id. In addition if dynamic point

configuration is enabled, then SCADA plugin must implement 'isScadaPoint' method to allow adapter to distinguish between status updates for SCADA and non-SCADA devices.

Parameter	Description
<scada name>.allow_non_scada_ops	Allow SCADA to operate non-SCADA devices in NMS model. **Default:** false (do not allow SCADA to operate non-SCADA devices)

Obtaining a List of Configured SCADA Points

SCADA system can retrieve list of SCADA points configured in NMS for that particular SCADA system using the **GetAllSCADAPoints** MultiSpeak operation. The information is returned in blocks and the caller may have to invoke this operation multiple times to retrieve all configured points.

Parameter	Description
<scada name>.points.block_size	Block size for responses to GetAllSCADAPoints requests. This is the maximum number of ScadaPoint objects which will be included into a single response to GetAllSCADAPoints request **Default:** 100

Own Web Service URL

There are cases when the SCADA component of the Oracle Utilities Network Management System MultiSpeak Adapter needs to send an URL of its own web service to the SCADA system. For example, when sending asynchronous request to the SCADA system, it needs to provide a URL where the response should be sent when the results become available.

Parameter	Description
<scada name>.OA.url	URL where the incoming web service of the Oracle Utilities Network Management System MultiSpeak Adapter is deployed.

SCADA_IDS

This database table is used to configure the list of SCADA systems that the adapter will be communicating with. For SCADA systems compatible with this adapter, the column **ADAPTER_TYPE** should have value *MULTISPEAK*.

Example

```
INSERT INTO scada_ids (id, scada_name, adapter_type, active)
VALUES (200, 'SCADA1', 'MULTISPEAK', 'Y');

INSERT INTO scada_ids (id, scada_name, adapter_type, active)
VALUES (201, 'SCADA2', 'MULTISPEAK', 'Y');
```

SCADA_LINKS

This database table is used to configure communication links to the SCADA systems. It is allowed to configure multiple links to a single SCADA system. If one link fails the adapter will switch to another one in the order determined by the PRIORITY field (only one link is active at any given time). HTTPS and JMS links are supported.

- For HTTP links, the **WS_URL** column is used to specify the URL of the SCADA system web service.
- For JMS links, the columns **REQUEST_QUEUE** and **RESPONSE_QUEUE** are used to specify the JNDI names of the JMS queues used to send requests to and receive responses from the SCADA system.
- The value in the **TIMEOUT** column controls how long the adapter should wait for a response from the SCADA system (in seconds). This is only applicable to JMS links. The maximum allowed value is 3600 (1 hour).
- The value in the **PERSISTENT** column defines the delivery mode for JMS messages. If set to 'Y' then JMS messages are persistent, otherwise they are not persistent. By default messages are not persistent. This is only applicable to JMS links.
- The value in the **SITE** column should contain the site name, as also used in the CES_PARAMETERS table.

Example

```
INSERT INTO scada_links (id, scada_id, ws_url, timeout, priority,
active, site)
VALUES (1, 200, 'http://scada-server1:8088/SCADA', 30, 1, 'Y',
'local');
INSERT INTO scada_links (id, scada_id, ws_url, timeout, priority,
active, site)
VALUES (2, 200, 'http://scada-server2:8088/SCADA', 30, 2, 'Y',
'local');
INSERT INTO scada_links (id, scada_id, request_queue, response_queue,
timeout, persistent, priority, active, site)
VALUES (3, 200, 'queue/ScadaRequest', 'queue/ScadaResponse', 30, 'N',
3, 'Y', 'local');
```

SCADA_LINK_OPS

This table can be used to configure communication parameters differently for individual outgoing web service operations. If an operation does not have a record in the SCADA_LINK_OPS table then values from the parent SCADA_LINKS record are used.

- Column **LINK_ID** is the foreign key into the **SCADA_LINKS** table.
- Column **OPERATION** is used to specify web service operation name. Supported operation names:
  - PingURL
  - GetMethods
  - InitiateAnalogReadByPointID
  - InitiateStatusReadByPointID
  - InitiateTagReadByPointID
  - InitiateControl
  - GetAllSCADAAnalogs
  - GetAllSCADAStatus
  - GetAllSCADATags
  - SCADAStatusChangedNotification
  - SCADAStatusChangedNotificationByPointID
  - StatusChangedNotificationByPointID
  - HighlightObjectInDisplay
  - SCADATagChangedNotification
  - TagChangedNotificationByPointID

  For HTTP links, the WS_URL column is used to specify the URL of the SCADA system web service. For JMS links, the columns REQUEST_QUEUE and RESPONSE_QUEUE are used to specify the JNDI names of the JMS queues used to send requests to and receive responses from the SCADA system.
- Value in the **TIMEOUT** column controls how long the adapter should wait for response from SCADA system (in seconds). Maximum allowed value is 3600 (1 hour).
- Value in the **PERSISTENT** column defines delivery mode for JMS messages. If set to 'Y' then JMS messages are persistent, otherwise they are not persistent. By default messages are not persistent.
- The value in the **SITE** column should contain the site name, as also used in the CES_PARAMETERS table.

Example

```
INSERT INTO scada_link_ops (id, link_id, operation, request_queue,
response_queue, timeout, persistent, site)
VALUES (31, 3, 'PingURL', 'queue/ScadaRequest_PingURL',
'queue/ScadaResponse_PingURL', 30, 'N', 'local');
INSERT INTO scada_link_ops (id, link_id, operation, ws_url, timeout,
persistent, site)
VALUES (32, 4, 'GetMethods', 'http://scada-server:8080/GetMethods',
30, 'N', 'local');
```

SCADA_SYNONYMS

This database table is used configure mapping of different data elements between SCADA and NMS systems. The **SCADA_ID** column should always be populated with the id of the SCADA system (value of the ID column in the **SCADA_IDS** table) the mapping applies to.

Device Status Mapping

By default the adapter maps MultiSpeak device status values 'Open' and 'Closed' to the corresponding device statuses in NMS and ignores all other device status values defined by MultiSpeak 4.1 specification. SCADA_SYNONYMS table allows customization of device status mapping by associating MultiSpeak device status value to a combination of NMS device status and quality code.

The MultiSpeak device status value should be entered into the KEYWORD column. The NMS device status value should be entered into the STATUS_VALUE column. Valid values are 'Open', 'Closed' or NULL.

If this column is NULL, the device status in NMS will not be affected.

The NMS quality code should be entered in the INT_VALUE column. It will be combined with the quality code received in the MultiSpeak message. The PROCESS_TYPE should be 'S'.

The following example maps the 'Travel' device status received from SCADA to quality code 8192 and keeps device status in NMS unchanged.

```
INSERT INTO scada_synonyms (id, scada_id, keyword, status_value,
int_value, process_type)
VALUES (tmp_seq.nextval, 200, 'Travel', null, 262144, 'S');
```

Attribute Mapping

Attribute mapping is used when SCADA point ID does not uniquely identify both NMS device and attribute. SCADA attribute name/key should be entered into the **KEYWORD** column. NMS attribute key should be entered into the **INT_VALUE** column. **PROCESS_TYPE** should be 'D' for digital measurements and 'A' for analogs.

Example

```
INSERT INTO scada_synonyms (id, scada_id, keyword, int_value,
process_type)
VALUES (1, 200, 'faultIndicator', 23, 'D');
INSERT INTO scada_synonyms (id, scada_id, keyword, int_value,
process_type)
VALUES (2, 200, 'Amps', 1012, 'A');
```

An additional method for configuring mapping for digital measurements is available. It applies specifically to the case when digital measurement is submitted to NMS via **SCADAStatusChangedNotification**, **SCADAStatusChangedNotificationByPointID** or **StatusChangedNotificationByPointID** operation. This is only possible when SCADA point id uniquely identifies digital measurement in NMS.

SCADA attribute name/key should be entered into the **KEYWORD** column.

NMS attribute name should be entered into **ATTRIBUTE_ALIAS** column.

Status value received from SCADA should be entered into **STATUS_VALUE** column.

Corresponding NMS attribute value should be entered into **INT_VALUE** column.

PROCESS_TYPE should be 'D'.

Column **VALUE** is not used.

Example configuration for AutoReclose digital attribute. Receiving status 'Open' from SCADA would set AutoReclose attribute for a device to 1. Receiving status 'Closed' from SCADA would set AutoReclose attribute for a device to 0.

```
INSERT INTO scada_synonyms (id, scada_id, keyword, int_value,
process_type,
  attribute_alias, status_value, value)
VALUES (247, 200, 'AutoReclose', 1, 'D', 'AutoReclose', 'Open', 'On');
INSERT INTO scada_synonyms (id, scada_id, keyword, int_value,
process_type,
  attribute_alias, status_value, value)
VALUES (248, 200, 'AutoReclose', 0, 'D', 'AutoReclose', 'Closed',
'Off');
```

Quality Code Mapping

The SCADA quality value should be entered into the **KEYWORD** column. The MultiSpeak 4.1 specification defines the following quality values: *Measured*, *Default*, *Estimated*, *Calculated*, *Initial*, *Last*, and *Failed*.

The NMS quality code should be entered into the **INT_VALUE** column (lower 11 bits are reserved for NMS-specific quality codes).

The PROCESS_TYPE should be 'Q'.

Example

```
INSERT INTO scada_synonyms (id, scada_id, keyword, int_value,
process_type)
VALUES (3, 200, 'Measured', 4096, 'Q');
```

Tag Type Mapping

For incoming SCADA tags:

The SCADA tag type should be entered into the **KEYWORD** column.

The NMS condition class name should be entered into **VALUE** column.

For outgoing NMS conditions:

NMS condition class name should be entered into the KEYWORD column.

SCADA tag type should be entered into the VALUE column.

The **PROCESS_TYPE** should be 'C'.

Examples

Incoming

```
INSERT INTO scada_synonyms (id, scada_id, keyword, value,
process_type)
VALUES (11, 200, 'Hold', 'hold', 'C');
INSERT INTO scada_synonyms (id, scada_id, keyword, value,
process_type)
VALUES (12, 200, 'Tag', 'tag', 'C');
INSERT INTO scada_synonyms (id, scada_id, keyword, value,
process_type)
VALUES (13, 200, 'Clear', 'clear', 'C');
```

Outgoing

```
INSERT INTO scada_synonyms (id, scada_id, keyword, value,
process_type)
VALUES (21, 200, 'hold', 'Hold', 'C');
INSERT INTO scada_synonyms (id, scada_id, keyword, value,
process_type)
VALUES (22, 200, 'hot', 'Hot', 'C');
INSERT INTO scada_synonyms (id, scada_id, keyword, value,
process_type)
VALUES (23, 200, 'note', 'Note', 'C');
```

CORBA Publisher Configuration for Outbound Controls

If the SCADA component of the Oracle Utilities Network Management System MultiSpeak Adapter is configured to allow outgoing controls to SCADA system, the 'scada-controls' source should be present and active in the PUBLISHER_SOURCES database table.

Example

```
INSERT INTO publisher_sources(source_id, source, active)
  VALUES(16, 'scada-controls', 'Y');
```

SCADA Point Configuration

The SCADA component of the Oracle Utilities Network Management System MultiSpeak Adapter loads SCADA point configuration from the **ANALOG_MEASUREMENTS** and **DIGITAL_MEASUREMENTS** database tables. It normally happens during initialization. The adapter can be forced to reload the SCADA point configuration during runtime using the following command:

```
Action -java multispeak.SCADA reload
```

The synchronization sequence will be automatically started after the SCADA point configuration is reloaded.

SCADA Configuration for Bellwether Meters

In order for the reading from bellwether meters to be reflected in NMS they need to be configured as SCADA measurements in the SCADA component of the NMS MultiSpeak adapter. The following set of steps should be used to perform such configuration.

1. Add entry to the SCADA_IDS table. The entry should match the 'config.bellwether_scada_name' configuration parameter of the AMR component of the NMS MultiSpeak adapter.
2. Add entries to the SCADA_MEASUREMENT_ST table for the measurement values coming from bellwether meters. The RTI_ALIAS field must be populated using format "<meter id>-<field name>", where <meter id> is the NMS meter identifier (AMR_CU_METERS.METER_ID) and <field name> is the meter reading field name coming from the AMR system (*e.g.*, "Voltage").
3. Populate SCADA_SYNONYMS table with attribute mappings.
4. Populate SCADA_SYNONYMS table with quality code mappings. The quality code for meter readings is always "Measured."

   Note: Do not populate SCADA_LINKS table to indicate that this is "input-only" SCADA system. It will prevent MultiSpeak adapter from attempting to send heartbeat requests to the AMR system.

Plugin Support

SCADA vendors may interpret MultiSpeak specification differently or use extensions, which are unique to each vendor. To address the issue of possible differences between various SCADA components, the NMS MultiSpeak adapter has a plugin interface.

Plugin is a Java class, which encapsulates functionality specific to a particular SCADA system. Plugin class must implement the interface **com.splwg.oms.interfaces.scada.ScadaSystemPlugin**.

Default implementation of the SCADA system plugin is provided by the `com.splwg.oms.interfaces.scada.plugins.GenericScada` class.

Methods

The available plugin methods, including description of how the default plugin class implements each method, are:

getScadaPointId

`java.lang.String` **`getScadaPointId`**`(MspObject obj)`

This method is used to extract SCADA Point ID from the incoming MultiSpeak message.

Parameters

`obj` - MultiSpeak object

Returns

SCADA Point ID

Default Implementation

Returns value of the objectID attribute if not empty, otherwise value of the objectName element

getScadaPointId

`java.lang.String` **`getScadaPointId`**`(ScadaTag tag)`

This method is used to extract SCADA Point ID from the incoming tag-related MultiSpeak message.

Parameters

`tag` - ScadaTag object

Returns

SCADA Point ID

Default Implementation

Returns value of the scadaPointID element

setScadaPointId

```
void setScadaPointId(ScadaTag tag, java.lang.String pointId)
```

This method is used to set SCADA Point ID in the outgoing tag update message.

Parameters

`tag` - ScadaTag object to be updated

`pointId` - SCADA Point ID

Default Implementation

Sets value of the scadaPointID element.

getStatus

```
StatusIdentifiers getStatus(final ScadaStatus status);
```

This method is used to extract device status value from the MultiSpeak device status update message.

Parameters

`status` - ScadaStatus object

Returns

MultiSpeak device status value

Default Implementation

Returns value of the status element.

getQualityCodes

```
java.util.List<java.lang.String> getQualityCodes(ScadaStatus status)
```

This method is used to extract quality values from MultiSpeak status update message.

Parameters

`status` - ScadaStatus object

Returns

list of MultiSpeak quality values

Default Implementation

Returns value of the quality element

getQualityCodes

```
java.util.List<java.lang.String> getQualityCodes(ScadaAnalog analog)
```

This method is used to extract quality values from MultiSpeak analog update message.

Parameters

`analog` - ScadaAnalog object

Returns

list of MultiSpeak quality values

Default Implementation

Returns value of the quality element

processChangeCounter

`int` **processChangeCounter**`(StatusPoint point, int changeCounter)`

This method is used to process SCADA change counter value.

Parameters

`point` - SCADA status point

`changeCounter` - new change counter value for the SCADA status point

Returns

Number of device operations, which occurred since the last processed update

Default Implementation

Assumes that change counter value received from SCADA is cumulative (total number of times device has changed state since some point in the past). Number of device operations is calculated as the difference between previous and current SCADA change counter values

getTagId

`java.lang.String` **getTagId**`(ScadaTag tag)`

This method is used to extract value from the tag update message, which is then used to populate external id of the corresponding condition in NMS. This value has to uniquely identify the tag in NMS.

Parameters

`tag` - ScadaTag object

Returns

SCADA tag id

Default Implementation

Returns value of the tagID element

setTagId

`void` **setTagId**`(ScadaTag tag, java.lang.String tagId)`

This method is used during synchronization process to set tag id value in the tag update message, which is later extracted by the getTagId method.

Parameters

`tag` - ScadaTag object to be updated

`tagId` - SCADA tag id

Default Implementation

Sets value of the tagID element

getTagHandle

```
Handle getTagHandle(ScadaTag tag)
```

This method is used to extract NMS condition handle from tag update message.

Parameters

`tag` - ScadaTag object

Returns

NMS condition handle

Default Implementation

Attempts to parse the objectID attribute as NMS handle and returns parsed value or null if the objectID attribute cannot be parsed as NMS handle.

setTagHandle

void setTagHandle(ScadaTag tag, Handle condHdl)

This method is used to set NMS condition handle in the outgoing tag update message.

Parameters

`tag` - ScadaTag object to be updated

`condHdl` - NMS condition handle

Default Implementation

Sets value of the objectID attribute.

getTagType

`java.lang.String` **getTagType**`(ScadaTag tag)`

This method is used to extract SCADA tag type from tag update message. This value is then used to determine corresponding NMS condition class.

Parameters

`tag` - ScadaTag object

Returns

SCADA tag type

Default Implementation

Returns value of the tagType element

setTagType

```
void setTagType(ScadaTag tag, java.lang.String tagType)
```

This method is used to set SCADA tag type in the outgoing tag update message.

Parameters

`tag` - ScadaTag object to be updated

`tagType` - SCADA tag type

Default Implementation

Sets value of the tagType element.

getTagData

`java.util.Map<java.lang.String,java.lang.Object>` **getTagData**`(ScadaTag tag)`

This method is used to extract additional tag data fields from tag message.

Parameters

`tag` - ScadaTag object

Returns

Map <tag field name -> tag field value>

Default Implementation

Returns map with a single entry ('text', value of the tagReason element)

setTagData

`void setTagData(ScadaTag tag, java.util.Map<java.lang.String, java.lang.Object> data)`

This method is used to set additional tag data fields in the outgoing tag update message.

Parameters

`tag` - ScadaTag object to be updated

`data` - Map <tag field name -> tag field value>

Default Implementation

Sets value of the tagReason element to the value of the 'text' entry in the data parameter.

getUserName

`java.lang.String` **getUserName**`(ScadaTag tag)`

Extracts operator username from tag update message.

Parameters

`tag` - ScadaTag object

Returns

SCADA operator username

Default Implementation

Returns value of the userName element

setUserName

`void setUserName(ScadaTag tag, java.lang.String username)`

This method sets operator username in the outgoing tag update message.

Parameters

`tag` - ScadaTag object to be updated

`username` - NMS operator username

Default Implementation

Sets value of the userName element.

getAction

`Action` **getAction**`(ScadaTag tag)`

This method is used to extract action from tag update message. Action determines if the request is to place a new tag, update an existing tag or remove an existing tag.

Parameters

`tag` - ScadaTag object

Returns

action

- `NEW` - add new tag
- `CHANGE` - update an existing tag
- `DELETE` - delete an existing tag

Default Implementation

Returns value of the verb attribute

setAction

`void` **setAction**`(ScadaTag tag, Action action)`

This method is used during synchronization process to set action value in the tag update message, which is later extracted by the getAction method.

Parameters

`tag` - ScadaTag object to be updated

`action` - action

- `NEW` - add new tag
- `CHANGE` - update an existing tag
- `DELETE` - delete an existing tag

Default Implementation

Sets value of the verb attribute

buildScadaPointId

`java.lang.String` **buildScadaPointId**`(com.splwg.oms.common.intersys.Handle nmsDeviceHandle, java.lang.String nmsDeviceAlias, int phase) throws java.lang.IllegalArgumentException`

This method is used to construct SCADA point id for status of an NMS device.

> **Note:** This is the first of two overloaded versions of the buildScadaPointId method.

Parameters

`nmsDeviceHandle` - NMS device handle

`nmsDeviceAlias` - NMS device alias

`phase` - phase

Returns

SCADA point id or null if not supported

Throws

`java.lang.IllegalArgumentException` - SCADA point id cannot be constructed for the given arguments

Default Implementation

Constructs SCADA point id of the following format:

- `<base name>[#<phase text>]`
- `<base name>` - nmsDeviceHandle if provided otherwise nmsDeviceAlias
- `<phase code>` - determined from the phase parameter according to the following rules: 1 - 'A', 2 - 'B', 4 - 'C', otherwise empty string

buildScadaPointId

```
java.lang.String
```

buildScadaPointId`(com.splwg.oms.common.intersys.HandlenmsDeviceHandle java.lang.String nmsDeviceAlias, int phase, java.lang.String scadaPointId)`
`throws java.lang.IllegalArgumentException`

This method is used to construct SCADA point id for status of an NMS device.

> **Note:** This is the second of two overloaded versions of the buildScadaPointId method.

Parameters

`nmsDeviceHandle` - NMS device handle

`nmsDeviceAlias` - NMS device alias

`phase` - phase

`scadaPointId` - SCADA point ID for the device status (only available for SCADA devices).

Returns

SCADA point id or null if not supported

Throws

`java.lang.IllegalArgumentException` - SCADA point id cannot be constructed for the given arguments

Default Implementation

Invokes the buildScadaPointId method. which does not accept the scadaPointId parameter. Thus the scadaPointId parameter passed to this method is not used in default implementation.

parseScadaPointId

```
ParsedSCADAPointId parseScadaPointId(java.lang.String scadaPointId)
throws java.lang.IllegalArgumentException
```

Parse SCADA point id.

Parameters

`scadaPointId` - SCADA point id

Returns

ParsedSCADAPountId object

Throws

`java.lang.IllegalArgumentException` - if scadaPointId cannot be parsed

Default Implementation

Populates NMS device id in ParsedSCADAPointId with scadaPointId argument.

generateControl

```
ScadaControl generateControl(ExpectedAction action)
```

This method is used to create ScadaControl object based on the received control request.

Parameters

`action` - control request

Returns

ScadaControl object or null is controls are not supported

Default Implementation

Returns null

isScadaPoint

```
boolean isScadaPoint(final MspObject obj)
```

This method is used to determine if obj is a SCADA-telemetered point. Currently this method gets invoked only for status points.

Parameters

`obj` - MultiSpeak object

Returns

true if obj is a SCADA-telemetered point, otherwise false

Default Implementation

Returns true

getPhaseName

java.lang.String getPhaseName(int phase)

This method is used to convert NMS phase code into phase name.

Parameters

`phases` - NMS phase code (1 - A, 2 - B, 4 - C)

Returns

phase name or empty string

Default Implementation

Returns 'A' if phase is 1, 'B' if phase is 2, and 'C' if phase is 4. Empty string is returned for any other input.

Building Custom SCADA Plug-ins

Prerequisites

- NMS is installed.
- `nms-install-config --java` script has been executed and `nms-multispeak.ear` file exists in the `$NMS_HOME/java/deploy` directory.

Steps

1. Unpack `$NMS_BASE/sdk/java/samples/nms-multispeak-plugins.zip` archive into desired location (this location will be referred as **PLUGIN_HOME**). It includes Java project directory structure including example of plugin class and Ant build files.
2. Create Java class implementing `com.splwg.oms.interfaces.scada.ScadaSystemPlugin` interface and place it into desired location under `PLUGIN_HOME/NmsScadaPlugin/src` directory.
3. Execute following command to compile plugin class(s), build jar file and incorporate the jar file into the nms-multispeak.ear file.

   ```
   ant -Dplatforms.JDK_1.6.home=<JDK home> clean update-ear
   ```

   where

   <JDK home> is the location where Java Development Kit 1.6 or later is installed
4. Update configuration for the Oracle Utilities NMS MultiSpeak Adapter to use new plugin class (configuration property `'<scada name>.plugin_class'`).
5. Updated `nms-multispeak.ear` file can now be deployed into WebLogic server.

High-Level Messages

SCADA

SCADA component of the NMS MultiSpeak adapter responds to several high-level messages. High-level message can be sent using Action command-line utility.

```
Action -java multispeak.SCADA <message>
```

Following messages are supported:

RELOAD

Forces adapter to reload configuration for the SCADA component.

```
RESYNC [statuses|analogs|tags] [<scada id>|<scada name>]
```

Initiates synchronization sequence.

If 'statuses', 'analogs' or 'tags' qualifier is present in the message then synchronization sequence is executed only for that particular data flow. Otherwise full synchronization sequence is executed.

If <scada id> or <scada name> is specified then synchronization sequence is executed only for the designated SCADA system. Otherwise synchronization sequence is executed for all SCADA systems the adapter is connected to.

FOCUS <user> <device> [<display>] [<action>]

Causes `HighlightObjectInDisplay` message to be sent to the SCADA system(s). This message is used for display integration between NMS and SCADA system. For example, NMS operator can select a SCADA device in NMS viewer and trigger action, which would cause the same device to be selected/highlighted on SCADA system's display.

Parameters

- `<user>` - username of SCADA operator
- `<device>` - NMS device handle
- `<display>` - SCADA display
- `<action>` - action to perform

AMR

The AMR component of the NMS MultiSpeak adapter responds to several high-level messages. High-level message can be sent using Action command-line utility.

```
Action -java multispeak.AMR <message>
```

The following messages are supported:

PING <meter id>

Initiates "urgent" meter ping request for a single meter. `<meter id>` is the internal NMS meter identifier. When response to this ping request is received, the high-level message `PING_RESPONSE` is sent to the client, which initiated the ping.

```
PING_RESPONSE <meter id> <meter status> <raw meter status>
```

Response to the PING message. This is an outgoing message. It should not be sent to the adapter. The client, which sent the PING message, is expected to handle this message.

Parameters

- `<meter id>` - the same meter identifier, which was sent in the PING message being responded to.
- `<meter status>` - meter status.

Possible values:

ON - meter has power

OFF - meter does not have power

UNKNOWN - undetermined meter status

ERROR - error occurred while trying to ping the meter

- `<raw meter status>` - raw meter status value as received from the AMR/AMI system.

Troubleshooting

NMS MultiSpeak Adapter uses Apache log4j library to log error, warning and debug messages. To enable debug output following lines should be added to the log4j configuration file used by the WebLogic Server where the Adapter is deployed.

```
<Logger name="com.splwg.oms.interfaces" level="debug"
additivity="false">
    <AppenderRef ref="Console"/>
</Logger>
<Logger name="com.splwg.oms.ws.multispeak" level="debug"
additivity="false">
    <AppenderRef ref="Console"/>
</Logger>
<Logger name="MultiSpeak" level="debug" additivity="false">
    <AppenderRef ref="Console"/>
</Logger>
```

At runtime debug output can be toggled by sending a high-level message to the appropriate component of the Adapter.

```
Action -java multispeak.<component> DEBUG <debug category>=<debug
level>
```

where `<component>` is one of

- AMR - AMR/AMI component
- AVL - AVL component
- SCADA - SCADA component

where `<debug category>` is one of

- com.splwg.oms.interfaces.scada - SCADA component
- com.splwg.oms.interfaces.amr - AMR/AMI component
- com.splwg.oms.interfaces.avl - AVL component
- com.splwg.oms.ws.multispeak - web service front end
- MultiSpeak - sent and received SOAP messages

where `<debug level>` is one of

- OFF - disable output
- ERROR - errors
- INFO - informational messages
- DEBUG - debugging information

Security Best Practices

- Do not allow the adapter to accept plain HTTP requests. The `option.no_multispeak_force_https` property in the `$NMS_CONFIG/jconfig/build.properties` file should be commented out. This is the default.
- Require Basic HTTP Authentication to be used instead of passing credentials in the header of MultiSpeak messages. The `option.no_multispeak_http_auth` property in the `$NMS_CONFIG/jconfig/build.properties` file should be commented out. This is the default.
- Deploy the MultiSpeak Adapter on a different WebLogic server from the one where the main NMS functionality (cesejb.ear) is deployed.

  Note: The MultiSpeak Adapter needs to be re-built using the `nms-install-config --java` command if the properties above in the `$NMS_CONFIG/jconfig/build.properties` file are modified.

Chapter 12

Mobile Workforce Management Adapter

This chapter includes the following topics:

- Introduction
- Installation
- Database Schema
- Supported Data Flows
- Software Configuration
- High-Level Messages
- Troubleshooting

Introduction

The Oracle Utilities Network Management System Mobile Workforce Management Adapter provides services required by the Oracle Utilities Network Management System Integration to Oracle Utilities Mobile Workforce Management.

One of the main functions of the adapter is translating Oracle Utilities Network Management System trouble events into Oracle Utilities Mobile Workforce Management activities. A trouble event is some situation in the electrical network, which requires attention (*e.g.*, an outage causing some number of customers to be without electric power). An activity is a unit of work which a mobile crew needs to perform. Single event can be associated with multiple activities during its lifetime (for example, one crew may need to perform initial assessment before another crew or crews can start repair work). The responsibility of the adapter is to maintain relationships between the trouble events and activities and subsequently between trouble events and mobile crews.

> **Note:** For more information see Oracle Utilities Network Management System Integration to Oracle Utilities Mobile Workforce Management Implementation Guide.

Installation

The Oracle Utilities Network Management System Mobile Workforce Management Adapter is delivered as a single file:

- **$NMS_BASE/dist/install/nms-mwm.ear.base** – NMS-MWM adapter application.

The *nms-install-config* script is used to apply adapter configuration changes and create the *nms-mwm.ear* file, which can be deployed to the Oracle WebLogic Server (see Software Configuration on page 12-10 for configuration instructions).

To avoid performance impact on the main NMS application (cesejb.ear), it is recommended that the nms-mwm.ear not be deployed on the same managed server where the cesejb.ear is deployed; however, both managed servers need to be in the same Oracle WebLogic Server domain.

Adapter Installation Instructions for Oracle WebLogic Server

Topics

- Create a Managed Server (Optional)
- Create a Foreign JNDI Provider

  Note: Creating a foreign JNDI provider is required when the nms-mwm.ear is on a different managed server than the cesejb.ear; if they are deployed on the same server, skip this step.
- Configure Foreign JNDI Provider
- Configure Data Source for the Adapters Managed Server
- Deploy the Adapter

Create a Managed Server (Optional)

To simplify creation of a new managed server, you may clone an existing Oracle Utilities Network Management System managed server.

1. Log in to the WebLogic Server Administration Console.
   Note: The URL for WebLogic will be http://*hostname:port*/console where *hostname* represents the DNS name or IP address of the Administration Server, and *port* represents the number of the port on which the Administration Server is listening for requests (port 7001 by default).
2. Click **Lock & Edit**.
3. In the **Domain Structure** tree, expand **Environment**, then select **Servers** to open the Summary of Servers page.
4. Select an Oracle Utilities Network Management System server in the Servers table and click **Clone**.
5. Click the link to the cloned server and edit the settings:
   - On the General tab, change the Listen Port and SSL Listen Port to unique values.
   - On the Server Start tab, edit the Arguments field to remove the DRMI_URL parameter:
     -DRMI_URL=t3://<hostname:port>

Create a Foreign JNDI Provider

In order for the Oracle Utilities Network Management System Mobile Workforce Management Adapter, deployed on its own managed server, to communicate with the Oracle Utilities Network Management System (cesejb.ear), a foreign JNDI provider must be configured.

> **Note:** Creating the foreign JNDI provider makes the cesejb.ear Enterprise JavaBeans (EJBs) appear local to the Oracle Utilities Network Management System Mobile Workforce Management Adapter.

1. Log in to the WebLogic Server Administration Console.
2. Click **Lock & Edit**.
3. In the **Domain Structure** tree, expand **Services**, then select **Foreign JNDI Providers** to open the Summary of Foreign JNDI Providers page.
4. On the Summary of Foreign JNDI Providers page, click **New**.
5. Enter a name for the new Foreign JNDI Provider.
6. Click **Finish**.

Configure Foreign JNDI Provider

1. In the Foreign JNDI Provider table, click the new foreign JNDI provider name link.
2. In the Settings for Foreign_JNDI_Provider_Name General tab, enter the following information:
   Initial Context Factory: weblogic.jndi.WLInitialContextFactory
   Provider URL: JNDI provider URL for the NMS (cesejb.ear)
   User: valid NMS user who has the 'NmsService' role in WebLogic Server
   Password: NMS user password
   Confirm Password: enter the same NMS user password to confirm
3. Click **Save**.
4. Select the **Links** tab.
5. Create the following foreign JNDI links:

Link Name	Local JNDI Name	Remote JNDI Name
Session	cesejb/Session/remote	cesejb/Session/remote
PublisherBean	cesejb/PublisherBean/remote	cesejb/PublisherBean/remote
CrewOperations	cesejb/CrewOperations/remote	cesejb/CrewOperations/remote

6. Select the **Targets** tab.
7. Select the managed server where the Oracle Utilities Network Management System Mobile Workforce Management Adapter will be deployed and click **Save**.

If the Foreign JNDI Provider is configured to use SSL, and NMS is using a self-signed SSL certificate, then the following steps are needed to establish trust between the managed servers:

1. Log in to the WebLogic Server Administration Console.
2. Click **Lock & Edit**.

3. In the Domain Structure tree, expand Environment, and then select **Servers** to open the Summary of Servers page.
4. On the Summary of Servers page, click the server where the nms-mwm.ear will be deployed.
5. Select the Keystores tab.
6. Find the Java Standard Trust Keystore label, and note the path to the trust keystore.
7. Import the NMS client certificate into the trust keystore used by the WebLogic server (from the previous step).

   keytool -import -alias nms-ca -keystore <WebLogic trust keystore path> -file $NMS_SSL_CERT

   Note: Self-signed certificates are supported for testing purposes. They are not recommended for production environments.

Configure Data Source for the Adapters Managed Server

You may configure a new JDBC data source or add the adapter managed server as a target to an existing Oracle Utilities Network Management System read/write data source.

Note: See "Configure Database Connectivity" in the *Oracle Utilities Network Management System Installation Guide* for information on creating JDBC data sources.

1. In the **Domain Structure** tree, expand Services, then select **Data Sources**.
2. In the Data Sources table, click the data source name (either a new data source or an existing read/write NMS data source) to open the Settings for JDBC_Data_Source_Name page.
3. Select the **Targets** tab.
4. Add the adapter managed server to the list of targets.
5. Click **Save**.

Deploy the Adapter

1. In the left pane of the Administration Console, select **Deployments**.
2. In the right pane, click **Install**.
3. In the Install Application Assistant, locate the nms-mwm.ear file.
4. Click **Next**.
5. Select **Install this deployment as an application**.
6. Click **Next**.
7. Select the servers and/or clusters to which you want to deploy the application.

   Note: If you have not created additional Managed Servers or clusters, you will not see this assistant page.
8. Click **Next**.
9. Set the deployed name of the application to: *nms-mwm*.
10. Click **Next**.
11. Review the configuration settings you have specified.
12. Click **Finish** to complete the installation.

Database Schema

The adapter uses several database tables where the information about trouble events, activities, and notifications is persisted.

OMS_MWM_EVENTS

This table stores the most recent information about the trouble events which have been sent to the Oracle Utilities Mobile Workforce Management system. This table is used to determine if trouble event update contains changes which should be sent out. This table is also used during synchronization sequence.

Field	Description
EVENT_IDX	Event index. Primary key.
EXTERNAL_ID	Event's external id.
DEVICE_CLS	Class part of the event's device handle.
DEVICE_IDX	Index part of the event's device handle.
PHASES	Affected device phases.
STATUS	Event's condition status (PSO, PDO, etc.)
STATE_KEY	Event's state key.
NUM_CUST_OUT	Number of affected customers.
NUM_CALLS	Number of customer calls.
TROUBLE_CODE	Event's trouble code (combination of the unique trouble codes of the customer calls).
ERT	Estimated restoration time.
COMMENTS	Event comments.
LAST_UPDATE_TIME	Last update time.

OMS_MWM_ACTIVITIES

This table stores mobile activities known to the adapter.

Field	Description
ACTIVITY_ID	Activity identifier. Primary key. Generated by the adapter.
EXTERNAL_ID	External identifier of the activity. Presently unused.
EVENT_IDX	NMS event index. Foreign key into the OMS_MWM_EVENTS table.
CREW_ID	Crew id/name.
CREW_TYPE	Crew type. Only populated if in NMS a generic crew is assigned to the activity.
STATUS	Activity status. Valid values: • INITIAL - initial state for activities created by NMS • NO_CREW - activity without a crew • DISPATCHED - activity has been given to a crew • DISPATCHED_ACK - crew has accepted the activity • EN_ROUTE - crew is en-route to work location • ARRIVED - create has arrived at the work location but haven't started the work • STARTED - crew has started the work • SUSPENDED - crew has temporarily suspended this activity • COMPLETE - activity is completed • CANCELLED - activity is cancelled
PENDING	'Pending flag (Y means that this activity should not be cancelled when crew is released). It is set when an activity is created from the MWM without a crew.
CREATED	Activity creation time.
COMPLETED	Activity completion/cancellation time.
LAST_UPDATE_TIME	Last update time.

OMS_MWM_ALARMS

This table stores notifications sent to the Oracle Utilities Mobile Workforce Management system. It is used to prevent sending of duplicate notifications.

Field	Description
ALARM_IDX	Alarm index. Primay key.
ACTIVITY_ID	Activity identifier. Foreign key into the OMS_MWM_ACTIVITIES table.
SENT_TIME	Time when the alarm was sent to mobile system.

OMS_MWM_CREW_ACTIONS

This table is used to record actions performed by a mobile crew in the course of working on a trouble event.

Field	Description
ID	Primary key. Generated by the sequence OMS_MWM_CREW_ACTIONS_SEQ.
EXTERNAL_ID	External identifier. Should be unique for the rows associated with the same trouble event.
EVENT_IDX	Event index.

Supported Data Flows

All data flows are implemented as SOAP web services. HTTPS transport is used (by default access over plain HTTP is disabled).

Outgoing Flows

Heartbeat

When connection to the Oracle Utilities Mobile Workforce Management system is not established the adapter periodically sends out **PingURL** message. Once such message is sent successfully, the connection is considered established, sending of the **PingURL** messages stops and the adapter executes synchronization sequence. The purpose of the synchronization sequence is to send out updates for the activities where corresponding trouble event information has changed with the connection was down.

Create/Update Mobile Activity

CreateUpdateMessage message is sent by the adapter whenever new mobile activity needs to be created or an existing activity needs to be updated. The message contains full details of the trouble event associated with the activity as well as details of the activity itself. If there are multiple activities associated with the same trouble event separate **CreateUpdateMessage** is sent for each activity.

Complete/Cancel Mobile Activity

CompleteOrder message is sent by the adapter when activity is needs to be completed or cancelled. When a trouble event is completed or cancelled all the activities associated with the trouble event are completed or cancelled. When a crew is released from a trouble event - only the activity associated with that crew is cancelled.

Notification

When a trouble event-related alarm is created in Oracle Utilities Network Management System a **Notification** message containing text of the alarm can be sent by the adapter. The alarm has to be of the supported type. Only one type of notifications is supported – ERT Expiration notification. Separate **Notification** message is sent for each activity associated with the trouble event.

Incoming Flows

Create Mobile Activity

Sending **CreateActivity** message to the adapter creates a new mobile activity for an existing trouble event. Either an index of an existing trouble event or activity id of an existing activity needs to be passed in the request. Activity id of the newly created mobile activity is returned.

Update Mobile Activity

Sending **UpdateActivity** message to the adapter allows to perform different crew-related actions depending on the **state** value passed in the request.

- **Dispatched** – assigns the mobile crew associated with the activity to the trouble event.
- **EnRoute** – places the mobile crew associated with the activity en-route to the trouble event.
- **Started** - places the mobile crew associated with the activity onsite for the trouble event.
- **Suspended** – suspends the mobile crew associated with the activity from working on the trouble event.
- **NoCrew** – releases the mobile crew associated with the activity from working on the trouble event. The same effect can be achieved by sending **crewId** in the message. Releasing the crew will cause the activity to be cancelled.
- **Complete** – completes the activity and releases the crew from the trouble event.
- **Cancelled** – cancels the activity and releases the crew from the trouble event.

Update Trouble Event

Sending **UpdateEvent** message to the adapter allows trouble event in the Oracle Utilities Network Management System to be updated. In particular it allows to

- Update Estimated Restoration Time
- Update Event Case Note
- Update Event Details information
- Update Failed Equipment information
- Update crew action steps
- Confirm Outage Device
- Move outage upstream or downstream
- Restore outage
- Cancel trouble event

Query

Query request allows retrieving information from Oracle Utilities Network Management System. The following query types are supported:

- **call** – returns customer calls for specific trouble event
- **customer** – returns customer information for specific account number
- **device_info** – returns device information for specific device name (alias)

Asynchronous Message Acknowledgment

The outgoing requests other than **PingURL** can be processed asynchronously. In such case the receiving side would send back response message containing error code 'DEFERRED'. This is an indication the request is being processed asynchronously. The adapter would wait up to the configured amount of time (mwm.ack_wait_timeout) for the incoming **MessageAck** message containing result of the earlier request. There are 3 possible outcomes: Success – request was processed successfully; Error – an error occurred while processing the request; Failure – request cannot be delivered to the Oracle Utilities Mobile Workforce Management system. Failure response is treated as loss of connection between the system and initiates heartbeat flow followed by synchronization sequence. If **MessageAck** message is not received during the configured period of time then the Failure outcome is assumed.

Correspondence between the original request message and the **MessageAck** message is established through the **messageId** attribute in the message header of the original request. The **MessageAck** message must contain the same message id.

Software Configuration

Configuration for the Oracle Utilities Network Management System Mobile Workforce Management Adapter comes from the following sources:

- CES_PARAMETERS database table
- Oracle Utilities Network Management System configuration rules
- Data mapping configuration

Support for Encrypted Configuration Parameters

Some configuration parameters that are stored in the CES_PARAMETERS database table contain sensitive information, such as authentication credentials, which should be protected. To protect this data, the VALUES column can be encrypted using Oracle WebLogic Server encrypt utility. This utility encrypts cleartext strings for use with Oracle WebLogic Server. Its output can then be used to populate values in CES_PARAMETERS database table.

> **Note:** For detailed information see "encrypt" in the Oracle WebLogic Server Command Reference.

Configuration Parameters

Entries in the CES_PARAMETERS database table for the Oracle Utilities Network Management System Mobile Workforce Management Adapter should have value 'MWMInterface' in the APP column. Column ATTRIB should contain name of the configuration parameter and column VALUE its value.

General Configuration Parameters

Parameter	Description
config.enabled	Enable/disable NMS-MWM interface. Default: true
config.credentials	Absolute path to the file containing user credentials the adapter will use to communicate with Oracle Utilities Network Management System. Either this parameter or both config.username and config.password parameters should be provided. If all are present, then the config.username/ config.password pair is used.
config.username	Valid NMS username, which has the 'NmsService' role in WebLogic Server.
config.password	NMS user password. Value of this parameter should be encrypted.
config.activity_accepted_action	Key of the state transition action, which is executed when activity create/update message is accepted by the Oracle Utilities Mobile Workforce Management system.
config.activity_rejected_action	Key of the state transition action, which is executed when activity create/update message is rejected by the Oracle Utilities Mobile Workforce Management system.
config.default_crew_type	Default crew type. The adapter uses this crew type when it needs to create a mobile crew which does not exist in NMS. This parameter should be set to the name of a valid NMS crew type. If not specified then the adapter will not be able to create crews.
config.allow_device_ops	Allow the adapter to operate device in NMS model. Default: false

Parameter	Description
config.call_send_limit	Maximum number of customer calls (incidents) to be included into an activity create/update message sent by the adapter. Customer calls with higher priority are included ahead of the calls with lower priority. Note: including large number of calls greatly increases message size. Default: 0
config.suppress_ws_errors	When enabled, it prevents errors from being included into web service response messages. Instead, the errors are just logged locally. Default: false
mwm.activity_id_prefix	Activity id prefix. Default: NMS-
mwm.ws_request_timeout	Timeout (in seconds) for the outgoing web service requests. Requests would fail if response is not received before the timeout expires. Default: 30
mwm.ack_wait_timeout	Timeout (in seconds) when waiting for acknowledgment of outgoing messages sent asynchronously. Link failure is declared if acknowledgment is not received before the timeout expires. Default 60
mwm.url	Default URL of the web service where the adapter should send outgoing messages.
mwm.url.<operation name>	Operation-specific web service URLs. Allows for the outgoing messages to be send to the different URLs based on the message type (operation). Valid operation names: • PingURL - hearbeat message • CreateUpdateOrder - creating or updating mobile activity • CompleteOrder - completing or canceling mobile activity • Notification - notification message
mwm.username	Username included in the outgoing messages as part of HTTP Basic authentication.

Parameter	Description
mwm.password	Password included in the outgoing messages as part of HTTP Basic authentication. Value of this parameter should be encrypted.
mwm.header.<attribute name>	The outgoing messages include standard header (XML element 'MessageHeader'). This configuration parameter is used to specify additional header attributes. The following attributes are required when integrating with the Oracle Utilities Mobile Workforce Management system: • systemId - NMS instance identifier • country - country code

Description Text for the Alarm Messages Generated by the Adapter

Parameter	Description
msg.started	The adapter has been started.
msg.stopped	The adapter has been stopped.
msg.established	Connection to the Oracle Utilities Mobile Workforce Management system has been established.
msg.synchronized	Synchronization sequence has finished.
msg.failed	Connection to the Oracle Utilities Mobile Workforce Management system has failed.
msg.activity_rejected	Oracle Utilities Mobile Workforce Management returned error in response to a request to create an activity. Note: this alarm is not current being generated.
msg.event_canceled	Event cancelation has been requested from the Oracle Utilities Mobile Workforce Management system but the event cannot be canceled in NMS.
msg.outage_restored	Outage restoration has been reported from the Oracle Utilities Mobile Workforce Management system but the outage cannot be restored in NMS (most likely because outage device cannot be closed).

Parameter	Description
msg.outage_confirmed	Outage has been confirmed by the Oracle Utilities Mobile Workforce Management system but the outage cannot be confirmed in NMS (outage device cannot be opened).

Query Configuration

Parameter	Description
query.type.<query type>	Query type. Valid query types: • device_info - device information • customer - customer information • call - customer call information for an event
query.<query type>.table	Database table or view to query. Not applicable to the "device_info" query type.
query.<query type>.where	Additional conditions to be included in the query's WHERE clause.
query.<query type>.order_by	Query's ORDER BY clause (sorting condition).
query.<query type>.max_results	Maximum number of rows allowed to be returned for this query type. Default: 100

query.<query type>.param.<param_name>	Maps query parameter name to a database column name.
	The following parameters are defined for different query types:
	• device_info
	  • deviceAlias - device alias
	• customer
	  • accountNumber -customer account number
	• call
	  • eventIdx - NMS event index

query.<query type>.column.<column_name>	Label for the data retrieved for the specified database column

Oracle Utilities Network Management System Configuration Rules

Oracle Utilities Network Management System configuration rules control various aspects of the system. You can configure these rules using the Oracle Utilities Network Management System Configuration Assistant tool. This section only covers the rules which directly affect the integration between Oracle Utilities Network Management System and Oracle Utilities Workforce Management system.

Rule	Description
crewFollowOutageDevice	This rule indicates whether or not crews dispatched to an event are automatically relocated if the device location changes. If this rule is enabled, dispatched crews are automatically relocated to the new device when an event moves to a different device in Oracle Utilities Network Management System. Typically, this rule should be enabled when Oracle Utilities Network Management System is integrated with Mobile Workforce Management system. Default: no (disabled)
mobilePreassignCrew	Allows Oracle Utilities Network Management System user to assign and release mobile crews. Default: no (disabled)

Rule	Description
repredictionCrewReassignment	This rule enables or disables automatic crew reassignment/redispatch when event reprediction occurs in Oracle Utilities Network Management System. For example: Events A, B, and C exist on laterals off of a feeder backbone. Crew 1 is dispatched to event A, crew 2 is dispatched to event B, and crew 3 is assigned to event C. More calls come in on the feeder, eventually causing the system to repredict and group events A, B, and C to an upstream device. The resulting grouped event is called event A. • If this rule is enabled, crew 1 remains dispatched to event A, crew 2 is undispatched from event B and redispatched to event A, and crew 3 is unassigned from event C and reassigned to event A. • If this rule is disabled, crew 1 remains dispatched to event A, crew 2 is only undispatched from event B, and crew 3 is only unassigned from event C. Default: yes (enabled)
sendToMobileState	This rule specifies the state(s) at which an event is sent to Oracle Utilities Mobile Workforce Management. When an event transitions to one of the states defined in this rule, a "send to mobile" flag is set in the event. The Oracle Utilities Network Management System-Mobile Workforce Management Interface uses this flag to determine whether an event should be processed by the interface, triggering field order creation in Oracle Utilities Mobile Workforce Management. Default: none

Rule	Description
singleCrewPerEvent	This rule indicates whether or not multiple crews can be assigned or dispatched to an event in Oracle Utilities Network Management System. If this rule is enabled, only one crew can be assigned or dispatched to an event at any given time. The repreditionCrewReassignment rule is implicitly disabled if this rule is enabled. Default: no (disabled)
useGenericAssign	Allows treating of crews with crew key less 1000 as "generic crews". Default: no (disabled)
useMdt	This rule enables or disables MDT (Mobile Dispatch Terminal) crew flag functionality. This rule should be enabled when the Oracle Utilities Network Management System-Mobile Workforce Management Interface is being used. Default: no (disabled)

Data Mapping

Data mapping converts data elements between a data source and a destination. Oracle Utilities Network Management System Mobile Workforce Management Adapter uses data mapping configuration to determine activity type and notification type for the outgoing messages.

Data Mapping Overview

The Oracle Utilities Network Management System Mobile Workforce Management Adapter provides a configurable data-mapping facility. This facility can be used to populate certain data elements in the outgoing messages.

Many-to-many data mapping: Most data flows from Oracle Utilities Network Management System to Oracle Utilities Mobile Workforce Management use many-to-many data mapping. This means that a source value can be mapped to many different target values, based on one or more conditions.

Data mapping is rules-based. Rule configuration is defined in the following database tables:

Mapping Table	Description
OMS_MWM_MAPPING_RULES	This table defines the field to be mapped and, for many-to-many mapping, the value to be written to the mapped field if all conditions are met.
OMS_MWM_MAPPING_CHECKS	This table defines conditions that may be applied to mapping rules.

Mapping Table	Description
OMS_MWM_MAPPING_RULE_CHECKS	This table associates a rule with a condition. Together, this table and the two previous tables are used to define many-to-many data mapping.

OMS_MWM_MAPPING_RULES Table

The OMS_MWM_MAPPING_RULES table contains rules for mapping data values between Oracle Utilities Network Management System and Oracle Utilities Mobile Workforce Management. The fields comprising each rule are described below:

Field	Description
rule_id	A unique identifier for this rule.
mapping	The name of the mapping rule set used to group related mapping rules. For example, the mapping rule set 'mwmOrder' defines rules for mapping Oracle Utilities Network Management System event data to the corresponding field order data in Oracle Utilities Mobile Workforce Management for outgoing orders.
mapped_field	The name of the field where the target value (the result of the mapping) should be written. For example, orderType, priority and alarmType are mapped fields.
mapped_value	This is the value to be written to the mapped field if all conditions defined for this rule are met. This is also referred to as the target value.
table_id	This field is not used.
rule_order	The order in which this rule should be applied when a series of rules is being used. The lowest value is used first.

Note: To define the default value for a field, configure a rule with no conditions and set that rule to be the last rule applied.

OMS_MWM_MAPPING_CHECKS Table

The OMS_MWM_MAPPING_CHECKS table contains conditions that can be used by the mapping rules defined in the OMS_MWM_MAPPING_RULES table.

Field	Description
check_id	A unique identifier for this condition.

Field	Description
field_name	The name of the field to which the condition applies.
cond_str	The condition to be applied. For a description of the condition format, see the next section.
negate	Indicates whether or not to negate the condition result. If this is set to Y, the result is negated. This field is optional.

Condition Format

Three different types of conditions are allowed in mapping rule checks. The format for each type of condition is shown in the table below.

Condition Type	Condition Format	Description
Exact string compare	<string to compare against>	The condition is true if the field value (converted to a string) exactly matches the comparison string.
Regular expression	@regex <regular expression>	The condition is the true if the field value (converted to a string) matches the given regular expression.
Class inheritance	@inheritFrom <class name>	The condition is true if the field contains the class name specified in the condition or the name of any child class.

Note: The angle brackets (<>) shown in the following table are not part of the format. The text inside the brackets should be replaced with the actual value as indicated.

OMS_MWM_MAPPING_RULE_CHECKS Table

This table is used to create many-to-many relationship between OMS_MWM_MAPPING_RULES and OMS_MWM_MAPPING_CHECKS tables. Each rule check associates a mapping rule with a condition (mapping check).

Field	Description
rule_id	The key to the mapping rule in the OMS_MWM_MAPPING_RULES table.
check_id	The key to the condition in the table OMS_MWM_MAPPING_CHECK table.

Mapping from Oracle Utilities Network Management System to Oracle Utilities

Mobile Workforce Management

All data mapping rules for Oracle Utilities Network Management System to Oracle Utilities Mobile Workforce Management data flows belong to the "mwmOrder" rule set. This rule set supports mapping for the following data elements:

- Activity Type ("orderType")
- Activity Priority ("externalPriority")
- Notification Type ("alarmType")

These data elements are mapped using many-to-many data mapping, as described in the following example.

Field Order Type Mapping Configuration Example

This example shows how to define data mapping rules to set the Oracle Utilities Mobile Workforce Management activity type to 'ROUTXFMWD' for events meeting the following conditions:

- The event is an RDO (real device outage);
- The event is on a transformer;
- The event has "Wire Down Pole-to-Pole" trouble code;
- The event is created under normal (non storm) conditions.

To configure data mapping for this example, complete the following steps:

1. Configure a mapping rule in the OMS_MWM_MAPPING_RULES table to set the Order Type to ROUTXFMWD. The rule set is 'mwmOrder'; the mapped field is 'orderType'; the mapped_value is 'ROUTXFMWD':

```
INSERT INTO oms_mwm_mapping_rules
(rule_id, mapping, mapped_field, mapped_value, rule_order)
VALUES (15, 'mwmOrder', 'orderType', 'ROUTXFMWD', 70);
```

2. Configure the required conditions in the OMS_MWM_MAPPING_CHECKS table:

```
/* RDO */
INSERT INTO oms_mwm_mapping_checks (check_id, field_name, cond_str)
VALUES (1, 'cond_status', '4');

/* Wire Down Pole to Pole */
INSERT INTO oms_mwm_mapping_checks (check_id, field_name, cond_str)
VALUES (15, 'trouble_code', '@regex ^(.*[-,]|)P2P([-,].*|)$');

/* Non storm */
INSERT INTO oms_mwm_mapping_checks (check_id, field_name, cond_str,
negate)
VALUES (33, 'rule_set', '@regex storm', 'Y');

/* Transformar */
INSERT INTO oms_mwm_mapping_checks (check_id, field_name, cond_str)
VALUES (35, 'dev_cls_name', '@inheritFrom transformer');
```

Assign each of the four conditions (rules checks) to the mapping rule in the OMS_MWM_MAPPING_RULE_CHECKS table:

```
/* ROUTXFMWD */
INSERT INTO oms_mwm_mapping_rule_checks (rule_id, check_id)
VALUES (15, 1);
INSERT INTO oms_mwm_mapping_rule_checks (rule_id, check_id)
VALUES (15, 35);
INSERT INTO oms_mwm_mapping_rule_checks (rule_id, check_id)
VALUES (15, 15);
```

```
INSERT INTO oms_mwm_mapping_rule_checks (rule_id, check_id)
VALUES (15, 33);
```

Use the same process described above to configure data mapping for notification types (alarmType) and activity priority values (priority).

High-Level Messages

The Oracle Utilities Network Management System Mobile Workforce Management Adapter responds several commands sent as high-level messages.

High-level message can be sent using Action command-line utility.

```
Action any.publisher* ejb client NMS-MWM command <message>
```

Following messages are supported:

- **RELOAD** - Forces adapter to reload configuration and then initiates synchronization sequence.
- **RESYNC** - Initiates synchronization sequence.
- **STOP** - Temporarily stops the adapter.
- **START** - Re-starts previously stopped adapter.

Troubleshooting

The Oracle Utilities Network Management System Mobile Workforce Management Adapter uses Apache log4j library to log error, warning and debug messages. To enable debug output following lines should be added to the log4j configuration file used by the WebLogic Server where the adapter is deployed.

```
<Logger name="com.splwg.oms.interfaces.mwm" level="debug"
additivity="false">
    <AppenderRef ref="Console"/>
</Logger>
<Logger name="MOBILE" level="debug" additivity="false">
    <AppenderRef ref="Console"/>
</Logger>
<Logger name="MOBLE_WS" level="debug" additivity="false">
    <AppenderRef ref="Console"/>
</Logger>
<Logger name="MOBILE_WS" level="debug" additivity="false">
    <AppenderRef ref="Console"/>
</Logger>
<Logger name="SOAP" level="debug" additivity="false">
    <AppenderRef ref="Console"/>
</Logger>
```

For additional details about configuring log4j logging in WebLogic Server, see the **Configure Log4j Logging Services** section in the *Oracle Utilities Network Management System Installation Guide*.

Chapter 13

SOAP Web Services

This chapter includes the following topics:

- Authentication
- Trouble Management Web Service
- Switching and Safety Web Service
- Damage Assessment Web Service

Authentication

In order to invoke Oracle Utilities Network Management System web services, the caller needs to be authenticated using valid Oracle Utilities Network Management System credentials. HTTP Basic Authentication protocol is used for authentication. Since HTTP Basic Authentication does not encrypt credentials, the HTTPS transport should be used.

Trouble Management Web Service

Trouble Management web service provide access to the subset of the trouble management functionality available in the Oracle Utilities Network Management System.

Port TroubleServiceSOAP

Location: https://<nms host>:<nms port>/nms/trouble

Protocol: SOAP

Default Style: document

Transport Protocol: SOAP over HTTP

Target Namespace: http://oms.splwg.com/ws/trouble/

Operations

CreateEvent
Creates new event in NMS.

Operation Type: Request-response. The endpoint receives a message and sends a correlated message.

SOAP Action: http://oms.splwg.com/ws/trouble/CreateEvent

Input: CreateEventRequest (soap:body, use = literal)

parameters type CreateEvent

status type jobConditionStatus - type string with restriction - enum { 'NO_OUTAGE', 'PROBABLE_SERVICE_OUTAGE', 'PROBABLE_DEVICE_OUTAGE', 'REAL_SERVICE_OUTAGE', 'REAL_DEVICE_OUTAGE', 'RESERVED_5', 'RESERVED_6', 'NON_OUTAGE', 'CRITICAL_MEET', 'FUTURE_MEET', 'CONFIRMED_SERVICE_OUTAGE', 'CONFIRMED_SECONDARY_OUTAGE', 'ADDITIONAL_ALARM', 'PROBABLE_MOMENTARY_OUTAGE', 'REAL_MOMENTARY_OUTAGE', 'PLANNED_OUTAGE', 'NON_ELECTRIC_EVENT', 'SWITCHING_JOB', 'FAULT_CURRENT_EVENT', 'CVR_JOB' }

Condition status

device - optional; type handle

Device handle

deviceAlias - optional; type string

Device alias. If device handle is not provided device alias is used to determine it

phases - optional; type phaseCode

Affected device phases (default: all phases)

groupable - optional; type boolean

Groupable flag (default: non-groupable)

beginTime - optional; type dateTime

Event begin time (default: current time)

restoreTime - optional; type dateTime

Event restoration time (only applicable to momentary outages)

priority - optional; type int

Event priority

appliedRule - optional; type int

Initial applied rule value. When creating real momentary outage value 3 (SRS_SCADA) indicates that this is SCADA-reported event

accidental - optional; type int

0 - normal, 1 - accidental, 2 - planned

numMomentaries - optional; type int

Number of momentaries (only applicable to momentary outages)

description - optional; type string

Description text

dispatchGroup - optional; type string

Dispatch group

userCustOut - optional; type int

Number of customers affected by the created event. Populates USER_CUST_OUT field in the created event

ddsAlarm - optional; type handle

Handle of the DDS alarm (device operation) related to the event being created.

switchingPlan - optional; type handle

When creating SWITCHING_JOB event this element must be populated with the switching plan handle.

Output: CreateEventResponse (soap:body, use = literal)

parameters type CreateEventResponse

event type handle

Handle of the created event

Fault: TroubleServiceException (soap:fault, use = literal)

parameters type TroubleServiceFault

SetGenericFields

Updates generic fields of an existing event in NMS.

Operation Type: Request-response. The endpoint receives a message, and sends a correlated message.

SOAP Action: http://oms.splwg.com/ws/trouble/SetGenericFields

Input: SetGenericFieldsRequest (soap:body, use = literal)

parameters type SetGenericFields

- event - optional; type handle

  Event handle

- externalId - optional; type string

  Event's external id.

- fields type ArrayOfStringPair

  Generic field values (list of name-value pairs).

Output: None.

Fault: TroubleServiceException (soap:fault, use = literal)

parameters type TroubleServiceFault

Faults

TroubleServiceFault

- errors - unbounded; type Error

  List of errors

- error type errorCode

  Error code.

  Valid values: 'ERROR', 'UNKNOWN_EVENT', 'UNKNOWN_GENERIC_FIELD', 'COMPLETED_EVENT'.

  [a] errorMessage type string[1]

  Error message

  [a] eventIdx type int

  Event index associated with the error

1. [a] bullets designate attributes.

Switching and Safety Web Service

There are two versions of this web service. One uses rpc-literal style and the other uses document-literal style. Both versions provide the same set of operations.

Port SwmanServiceBeanPort

Location: https://<nms host>:<nms port>/ExternalSwmanServiceImpl/SwmanServiceBean

Protocol: SOAP

Encoding style: rpc

Transport protocol: SOAP over HTTP

Target Namespace: http://www.oracle.com/ugbu/nms

Port SwmanServiceDocBeanPort

Location: https://<nms host>:<nms port>/ExternalDocSwmanServiceImpl/SwmanServiceDocBean

Protocol: SOAP

Encoding style: document

Transport protocol: SOAP over HTTP

Target Namespace: http://www.oracle.com/ugbu/nms

Operations

GetSafetyDocument
Retrieves safety document by handle.

Operation Type: Request-response. The endpoint receives a message, and sends a correlated message.

Input: GetSafetyDocument (soap:body, use = literal)

docHdl type handle

Safety document handle.

Output: GetSafetyDocumentResponse (soap:body, use = literal)

safetyDoc type SafetyDoc

Safety document

- id - nillable; type long

  Safety document identifier

- externalId - optional; type normalizedString

  Safety document external identifier

- handle - nillable; type handle

  Safety document handle

- docType - nillable; type normalizedString

  Safety document type

- state - optional; type State

  Real-time state

- swSheet - optional; type handle

  Switching sheet handle
- deleted - optional; type boolean

  Safety document deleted flag
- version - optional; type long

  Safety document version (used for optimistic locking)
- extensions - optional; type ArrayOfExtensionField

  Extension fields
- steps - optional; type ArrayOfSwStep

  Switching steps associated with this safety document
  - step - optional, unbounded; type SwStep

    Switching step
    - cls - nillable; type long

      Switching step class
    - id - nillable; type long

      Switching step identifier
    - parentId - optional; type long

      Parent step
    - groupNumber - optional; type long

      Group number
    - device - optional; type handle

      Handle of the main device associated with this switching step
    - deviceAlias - optional; type normalizedString

      Alias of the main device associated with this switching step
    - controlZone - optional; type ControlZone

      Switching step control zone
    - phases - optional; type phaseCode

      Phases of the main device affected by this switching step
    - availablePhases - optional; type phaseCode

      All phases of the main device associated with this switching step
    - secondaryDevice - optional; type handle

      Handle of the secondary device associated with this switching step
    - groundNode - optional; type handle

      Grounding node associated with this switching step
    - condition - optional; type handle

      Condition associated with this switching step
    - state - optional; type State

      Switching step real-time state
    - controlAction - optional; type ControlAction

      Control Tool action

- action - nillable; type normalizedString
- switchingCode - optional; type normalizedString
- attribute - optional; type long

[a] cls - required; type normalizedString

[a] idx - required; type normalizedString

[a] key - required; type long

Switching step control action

- revision - optional; type long

Switching step revision number

- description - optional; type string

Description

- comments - optional; type string

Comments

- plannedOffset - optional; type duration

Planned offset

- createTime - optional; type dateTime

Date/time when this step was created

- createUser - optional; type normalizedString

User who created this step

- updateTime - optional; type dateTime

Date/time when step was last updated

- updateUser - optional; type normalizedString

User who made the latest update this step

- instructTime - optional; type dateTime

Date/time when step was instructed

- instructUser - optional; type normalizedString

User who instructed this step

- executeTime - optional; type dateTime

Date/time when step was executed

- executeUser - optional; type normalizedString

User who executed this step

- executeOrder - optional; type long

Step execution order

- operationOutcome - optional; type normalizedString

Operation outcome

- undoOperationOutcome - optional; type normalizedString

Undo operation outcome

- resultOfOperation - optional; type normalizedString

Result of operation

- resultFeeders - optional; type normalizedString

Result feeders

- lastResultOfOperation - optional; type normalizedString

Last result of operation

- editedOperation - optional; type normalizedString

Edited operation

- modelBuild - optional; type normalizedString

Step affected by model build

- safetyDocId - optional; type long

Safety document id (for safety-related steps)

- safetyDevStatus - optional; type normalizedString

Status of the device as it pertains to the associated safety document. This is used to keep track of a user's modifications to a safety document's device list. ADD - The device has been added as part of a viewer device selection. ADD_STEP - The device has been added as part of a switching sheet step association. COND_APPLIED - The condition has been applied and updated to the device in the device list. INCOMPLETE - The device is associated to a switching step where the condition has already been applied to the device. REMOVE - The device has been marked for removal and will be removed the next time the document transitions from the Unissued to Issued state. REMOVED - The device has been removed from the device list. These devices are filtered out of the device list.

- safetyCondAdded - optional; type long

Safety document version number where this safety condition step was added

- safetyCondRemoved - optional; type long

Safety document version number where this safety condition step was added

- crews - optional; type ArrayOfCrewId

Crew ids

- extensions - optional; type ArrayOfExtensionField

Extension fields

- crews - optional; type ArrayOfSafetyCrew

Crew information associated with this safety document

- crew - optional, unbounded; type SafetyCrew

Crew information associated with a safety document

- crewId - optional; type normalizedString

Crew id

- position - optional; type normalizedString

Position the crew is in with regards to the zone of protection

- auditLog - optional; type ArrayOfAuditLogEntry

Audit log entries

- log - optional, unbounded; type AuditLogEntry

Audit log entry

- id - nillable; type long

  Audit log entry identifier
- entryType - optional; type normalizedString

  Audit log entry type
- userLog - optional; type string

  User log
- device - optional; type handle

  Device handle
- deviceAlias - optional; type normalizedString

  Device alias
- state - optional; type State

  State
- revision - optional; type long

  Revision number
- comment - optional; type string

  Log comment
- phases - optional; type phaseCode

  Phases
- crews - optional; type ArrayOfCrewId

  Crew ids

Fault: OmsServiceException (soap:fault, use = literal)

fault type OmsServiceException

GetSafetyDocumentsForSheet

Retrieves all safety documents for a switching sheet.

Operation Type: Request-response. The endpoint receives a message, and sends a correlated message.

Input: GetSafetyDocumentsForSheet (soap:body, use = literal)

sheetHdl type handle

Switching sheet handle.

Output: GetSafetyDocumentsForSheetResponse (soap:body, use = literal)

safetyDocs type ArrayOfSafetyDoc

List of safety documents

- safetyDoc - optional, unbounded; type SafetyDoc

  Safety document (see GetSafetyDocument)

Fault: OmsServiceException (soap:fault, use = literal)

fault type OmsServiceException

GetSwitchingSheet

Retrieves switching sheet by handle.

Operation Type: Request-response. The endpoint receives a message, and sends a correlated message.

Input: GetSwitchingSheet (soap:body, use = literal)

sheetHdl type handle

Switching sheet handle

Output: GetSwitchingSheetResponse (soap:body, use = literal)

swSheet type SwSheet

Switching sheet

- id - nillable; type long

  Switching sheet identifier
- handle - nillable; type handle

  Switching sheet handle
- externalId - optional; type normalizedString

  Switching sheet external identifier
- device - optional; type handle

  Handle of the main device associated with this switching sheet
- deviceAlias - optional; type normalizedString

  Alias of the main device associated with this switching sheet
- controlZone - optional; type ControlZone

  Switching sheet control zone
- owner - optional; type normalizedString

  Switching sheet owner
- revision - optional; type long

  Switching sheet revision number
- version - nillable; type long

  Switching sheet version (used for optimistic locking)
- checkedIn - optional; type normalizedString

  Switching sheet is checked in
- state - optional; type State

  Real-time state
- createTime - optional; type dateTime

  Date/time when this sheet was created
- createUser - optional; type normalizedString

  User who created this sheet
- updateTime - optional; type dateTime

  Date/time when this sheet was last updated
- updateUser - optional; type normalizedString

  User who updated this sheet last

- lockedTime - optional; type dateTime

  Date/time when sheet was locked
- lockedUser - optional; type normalizedString

  User who locked this sheet
- startTime - optional; type dateTime

  Date/time when execution of this switching sheet is expected to start
- finishTime - optional; type dateTime

  Date/time when execution of this switching sheet is expected to finish
- completedTime - optional; type dateTime

  Completion date/time
- reworkDescription - optional; type string

  Rework description
- reworkTime - optional; type dateTime

  Rework date/time
- defaultOffset - optional; type duration

  Default offset
- modelBuild - optional; type normalizedString

  Switching sheet is affected by model build
- extensions - optional; type ArrayOfExtensionField

  Extension fields
- steps - optional; type ArrayOfSwStep

  Switching steps
- step - optional, unbounded; type SwStep

  Switching step
  - cls - nillable; type long

    Switching step class
  - id - nillable; type long

    Switching step identifier
  - parentId - optional; type long

    Parent step
  - groupNumber - optional; type long

    Group number
  - device - optional; type handle

    Handle of the main device associated with this switching step
  - deviceAlias - optional; type normalizedString

    Alias of the main device associated with this switching step
  - controlZone - optional; type ControlZone

    Switching step control zone

- phases - optional; type phaseCode

  Phases of the main device affected by this switching step
- availablePhases - optional; type phaseCode

  All phases of the main device associated with this switching step
- secondaryDevice - optional; type handle

  Handle of the secondary device associated with this switching step
- groundNode - optional; type handle

  Grounding node associated with this switching step
- condition - optional; type handle

  Condition associated with this switching step
- state - optional; type State

  Switching step real-time state
- controlAction - optional; type ControlAction

  Control tool action
  - action - nillable; type normalizedString
  - switchingCode - optional; type normalizedString
  - attribute - optional; type long

  [a] cls - required; type normalizedString

  [a] idx - required; type normalizedString

  [a] key - required; type long

  Switching step control action
- revision - optional; type long

  Switching step revision number
- description - optional; type string

  Description
- comments - optional; type string

  Comments
- plannedOffset - optional; type duration

  Planned offset
- createTime - optional; type dateTime

  Date/time when this step was created
- createUser - optional; type normalizedString

  User who created this step
- updateTime - optional; type dateTime

  Date/time when step was last updated
- updateUser - optional; type normalizedString

  User who made the latest update this step
- instructTime - optional; type dateTime

  Date/time when step was instructed

- instructUser - optional; type normalizedString

  User who instructed this step
- executeTime - optional; type dateTime

  Date/time when step was executed
- executeUser - optional; type normalizedString

  User who executed this step
- executeOrder - optional; type long

  Step execution order
- operationOutcome - optional; type normalizedString

  Operation outcome
- undoOperationOutcome - optional; type normalizedString

  Undo operation outcome
- resultOfOperation - optional; type normalizedString

  Result of operation
- resultFeeders - optional; type normalizedString

  Result feeders
- lastResultOfOperation - optional; type normalizedString

  Last result of operation
- editedOperation - optional; type normalizedString

  Edited operation
- modelBuild - optional; type normalizedString

  Step affected by model build
- safetyDocId - optional; type long

  Safety document id (for safety-related steps)
- safetyDevStatus - optional; type normalizedString

  Status of the device as it pertains to the associated safety document. This is used to keep track of a user's modifications to a safety document's device list. ADD - The device has been added as part of a viewer device selection. ADD_STEP - The device has been added as part of a switching sheet step association. COND_APPLIED - The condition has been applied and updated to the device in the device list. INCOMPLETE - The device is associated to a switching step where the condition has already been applied to the device. REMOVE - The device has been marked for removal and will be removed the next time the document transitions from the Unissued to Issued state. REMOVED - The device has been removed from the device list. These devices are filtered out of the device list.
- safetyCondAdded - optional; type long

  Safety document version number where this safety condition step was added
- safetyCondRemoved - optional; type long

  Safety document version number where this safety condition step was added
- crews - optional; type ArrayOfCrewId

  Crew ids

- extensions - optional; type ArrayOfExtensionField

  Extension fields

- auditLog - optional; type ArrayOfAuditLogEntry

  Audit log entries

  - log - optional, unbounded; type AuditLogEntry

    Audit log entry

    - id - nillable; type long

      Audit log entry identifier

    - entryType - optional; type normalizedString

      Audit log entry type

    - userLog - optional; type string

      User log

    - device - optional; type handle

      Device handle

    - deviceAlias - optional; type normalizedString

      Device alias

    - state - optional; type State

      State

    - revision - optional; type long

      Revision number

    - comment - optional; type string

      Log comment

    - phases - optional; type phaseCode

      Phases

    - crews - optional; type ArrayOfCrewId

      Crew ids

- standaloneSafetyDoc - optional; type SafetyDoc

  Safety document (see GetSafetyDocument)

Fault: OmsServiceException (soap:fault, use = literal)

fault type OmsServiceException

createSwmanSheetFromExternalSystem

Creates new or updates an existing switching sheet.

Operation Type: Request-response. The endpoint receives a message, and sends a correlated message.

Input: createSwmanSheetFromExternalSystem (soap:body, use = literal)

dataString type string

XML representation of the switching sheet.

sheetHdl type handle

Switching sheet handle.

Output: createSwmanSheetFromExternalSystemResponse (soap:body, use = literal)

return type int

Return code.

sheetHdl type handle

Switching sheet handle.

Fault: OmsServiceException (soap:fault, use = literal)

fault type OmsServiceException

sheetStateTransition

Executes state transition on a switching sheet.

Operation Type: Request-response. The endpoint receives a message, and sends a correlated message.

Input: sheetStateTransition (soap:body, use = literal)

sheetHdl type handle

Switching sheet handle.

actionType type string

State transition action type.

actionName type string

State transition action name.

username type string

Username.

Output: sheetStateTransitionResponse (soap:body, use = literal)

Fault: OmsServiceException (soap:fault, use = literal)

fault type OmsServiceException

Damage Assessment Web Service

Oracle Utilities Network Management System Damage Assessment web service

Port DamageServiceSOAP

Location: https://<nms host>:<nms port>/nms/damage

Protocol: SOAP

Default style: document

Transport protocol: SOAP over HTTP

Target Namespace: http://oms.splwg.com/ws/damage/

Operations

CompleteDamageReport

Completes an existing damage report.

Operation Type: Request-response. The endpoint receives a message, and sends a correlated message.

SOAP Action: http://oms.splwg.com/ws/damage/CompleteDamageReport

Input: CompleteDamageReportRequest (soap:body, use = literal)

parameters type CompleteDamageReport

reportId type long

Damage report id

Output: CompleteDamageReportResponse (soap:body, use = literal)

parameters type CompleteDamageReportResponse

report type damageReport

Damage assessment report

- id - optional; type long

  Damage report unique identifier assigned by the server
- groupable - optional; type boolean

  Allow this damage report to be grouped upstream
- externalId - optional; type string

  External id of the damage assessment incident in NMS
- eventIdx - optional; type int

  Index of the event associated with this damage report
- eventExternalId - optional; type string

  External id of the event associated with this damage report
- patrolEventIdx - optional; type int

  Index of the patrol event associated with this damage report
- device - optional; type handle

  [a] cls - required; type short

  [a] index - required; type int

  [a] app - optional; type short

  Handle of the affected device
- deviceAlias - optional; type string

  Alias of the affected device
- feeder - optional; type string

  Feeder name
- gpsLocation - optional; type gpsLocation

  GPS location
  - latitude type double

    Latitude
  - longitude type double

    Longitude

  GPS location of the damage

- zone - optional; type string
- grid - optional; type string
- location - optional; type string
- section - optional; type string
- city - optional; type string
- address - optional; type string

  Street address of the damage
- phases - optional; type phaseCode - type string with restriction - enum { 'NONE', 'A', 'B', 'AB', 'C', 'AC', 'BC', 'ABC', 'N', 'AN', 'BN', 'ABN', 'CN', 'ACN', 'BCN', 'ABCN', 'Unknown' }

  Affected phases
- loadAffected - optional; type boolean

  Is damage causing an outage
- roadBlocked - optional; type boolean

  Is road blocked
- streetLightDamage - optional; type boolean

  Is street light damage reported
- hazardous - optional; type boolean

  Is damage hazardous
- crew - optional; type crew

  [a] id - required; type string

  NMS crew identifier (crew name)

  [a] mobileNumber - optional; type string

  Crew's mobile (radio) number

  Crew, who submitted this damage report
- stateName - optional; type string

  Damage report state (New, Assessed, etc.)
- stateBitmask - optional; type int

  Damage report state bitmask (New=0x1, Assessed=0x2, Complete=0x4, Obsolete=0x8)
- active - optional; type boolean
- reportTime - optional; type dateTime
- lastModified - optional; type dateTime
- version - optional; type long

  Damage report version used for optimistic concurrency control
- damageType - optional, unbounded; type reportDamageType
  - typeId type int
  - typeName - optional; type normalizedString
  - accessible - optional; type int
  - inaccessible - optional; type int

List of specific damage instances

- damageComment - optional; type string
- requiredPart - optional, unbounded; type reportDamagePart
  - quantity - optional; type int
  - partId type string

  List of required parts/materials needed to address reported damage
- requirePartsComment type string
- crewType - optional, unbounded; type crewType
  - id type int

    Crew type id
  - name type string

    Crew type name

  List of crew types needed to address reported damage
- miscField1 - optional; type string

  Mapped to database column DAMAGE_REPORT.MISC_TEXT1
- miscField2 - optional; type string

  Mapped to database column DAMAGE_REPORT.MISC_TEXT2
- miscField3 - optional; type string

  Mapped to database column DAMAGE_REPORT.MISC_TEXT3
- miscField4 - optional; type string

  Mapped to database column DAMAGE_REPORT.MISC_TEXT4
- miscField5 - optional; type string

  Mapped to database column DAMAGE_REPORT.MISC_TEXT5
- miscField6 - optional; type string

  Mapped to database column DAMAGE_REPORT.MISC_OPTION1
- miscField7 - optional; type string

  Mapped to database column DAMAGE_REPORT.MISC_OPTION2
- miscField8 - optional; type string

  Mapped to database column DAMAGE_REPORT.MISC_OPTION3
- miscField9 - optional; type string

  Mapped to database column DAMAGE_REPORT.MISC_OPTION4
- miscField10 - optional; type string

  Mapped to database column DAMAGE_REPORT.MISC_OPTION5
- udf1 - optional; type string

  User-defined field 1
- udf2 - optional; type string

  User-defined field 2
- udf3 - optional; type string

  User-defined field 3

- udf4 - optional; type string

  User-defined field 4
- udf5 - optional; type string

  User-defined field 5
- udf6 - optional; type string

  User-defined field 6
- udf7 - optional; type string

  User-defined field 7
- udf8 - optional; type string

  User-defined field 8
- udf9 - optional; type string

  User-defined field 9
- udf10 - optional; type string

  User-defined field 10
- udf11 - optional; type string

  User-defined field 11
- udf12 - optional; type string

  User-defined field 12
- udf13 - optional; type string

  User-defined field 13
- udf14 - optional; type string

  User-defined field 14
- udf15 - optional; type string

  User-defined field 15
- udf16 - optional; type string

  User-defined field 16
- udf17 - optional; type string

  User-defined field 17
- udf18 - optional; type string

  User-defined field 18
- udf19 - optional; type string

  User-defined field 19
- udf20 - optional; type string

  User-defined field 20
- attachment - optional, unbounded; type attachment

  List of damage report attachments. Actual attachment data is not included.
  - data - optional; type base64Binary

    Attachment data
  - description - optional; type string

Description of the attachment

[a] id - required; type string

Attachment id (file name)

[a] reportId - required; type long

Damage report id

[a] uri - optional; type anyURI

Link to the attachment. Can be used instead of passing attachment data in the message

[a] contentType - optional; type string

MIME content type

[a] lastModified - optional; type dateTime

Last modification timestamp

Fault: DamageServiceException (soap:fault, use = literal)

parameters type DamageServiceFault

errors - unbounded; type Error

Damage Service error

- error type errorCode - type string with restriction - enum { 'CreateFailed', 'CompletedEvent', 'UnknownEvent', 'BadEventType', 'LoadAffectedSetForNonOutage', 'DatabaseError', 'UnknownReportId', 'AlreadyCompleted', 'StaleData', 'IncidentCreateFailed', 'InvalidCrewType', 'InvalidDamageType', 'InvalidRequiredPart', 'NeedEventOrDevice', 'NeedAddress', 'NeedCrewId', 'MoveFailed', 'AttachmentTooBig', 'AttachmentSaveError', 'AttachmentNotFound', 'Other' }

  String representation of the error code

[a] code type int

Error code

[a] reportId type long

Damage report id associated with the error

DeleteAttachments

Deletes one or more damage report attachments.

Operation Type: Request-response. The endpoint receives a message, and sends a correlated message.

SOAP Action: http://oms.splwg.com/ws/damage/DeleteAttachments

Input: DeleteAttachmentsRequest (soap:body, use = literal)

parameters type DeleteAttachments

attachmentId - unbounded; type attachmentId

Identifier for damage report attachment

- id type string

  Attachment id (file name). If empty then all attachments for this damage report are included.

- reportId type long

  Damage report id

Output: DeleteAttachmentsResponse (soap:body, use = literal)

Fault: DamageServiceException (soap:fault, use = literal)

parameters type DamageServiceFault

errors - unbounded; type Error

Damage Service error

- error type errorCode - type string with restriction - enum { 'CreateFailed', 'CompletedEvent', 'UnknownEvent', 'BadEventType', 'LoadAffectedSetForNonOutage', 'DatabaseError', 'UnknownReportId', 'AlreadyCompleted', 'StaleData', 'IncidentCreateFailed', 'InvalidCrewType', 'InvalidDamageType', 'InvalidRequiredPart', 'NeedEventOrDevice', 'NeedAddress', 'NeedCrewId', 'MoveFailed', 'AttachmentTooBig', 'AttachmentSaveError', 'AttachmentNotFound', 'Other' }

  String representation of the error code

[a] code type int

  Error code

[a] reportId type long

  Damage report id associated with the error

GetAttachments

Retrieves damage report attachments.

Operation Type: Request-response. The endpoint receives a message, and sends a correlated message.

SOAP Action: http://oms.splwg.com/ws/damage/GetAttachments

Input: GetAttachmentsRequest (soap:body, use = literal)

parameters type GetAttachments

attachmentId - unbounded; type attachmentId

Identifier for damage report attachment

- id type string

  Attachment id (file name). If empty then all attachments for this damage report are included.

- reportId type long

  Damage report id

Output: GetAttachmentsResponse (soap:body, use = literal)

parameters type GetAttachmentsResponse

result - optional, unbounded; type attachment

[a] data - optional; type base64Binary

  Attachment data

[a] description - optional; type string

  Description of the attachment

- id - required; type string

  Attachment id (file name)

- reportId - required; type long

Damage report id

- uri - optional; type anyURI

  Link to the attachment. Can be used instead of passing attachment data in the message

- contentType - optional; type string

  MIME content type

- lastModified - optional; type dateTime

  Last modification timestamp

Fault: DamageServiceException (soap:fault, use = literal)

parameters type DamageServiceFault

errors - unbounded; type Error

Damage Service error

- error type errorCode - type string with restriction - enum { 'CreateFailed', 'CompletedEvent', 'UnknownEvent', 'BadEventType', 'LoadAffectedSetForNonOutage', 'DatabaseError', 'UnknownReportId', 'AlreadyCompleted', 'StaleData', 'IncidentCreateFailed', 'InvalidCrewType', 'InvalidDamageType', 'InvalidRequiredPart', 'NeedEventOrDevice', 'NeedAddress', 'NeedCrewId', 'MoveFailed', 'AttachmentTooBig', 'AttachmentSaveError', 'AttachmentNotFound', 'Other' }

  String representation of the error code

- code type int

  Error code

- reportId type long

  Damage report id associated with the error

GetCrewTypes

Returns all crew types configured in NMS.

Operation Type: Request-response. The endpoint receives a message, and sends a correlated message.

SOAP Action: http://oms.splwg.com/ws/damage/GetCrewTypes

Input: GetCrewTypesRequest (soap:body, use = literal)

parameters type GetCrewTypes

Output: GetCrewTypesResponse (soap:body, use = literal)

parameters type GetCrewTypesResponse

result - optional, unbounded; type crewType

- id type int

  Crew type id

- name type string

  Crew type name

Fault: DamageServiceException (soap:fault, use = literal)

parameters type DamageServiceFault

errors - unbounded; type Error

Damage Service error

[a] error type errorCode - type string with restriction - enum { 'CreateFailed', 'CompletedEvent', 'UnknownEvent', 'BadEventType', 'LoadAffectedSetForNonOutage', 'DatabaseError', 'UnknownReportId', 'AlreadyCompleted', 'StaleData', 'IncidentCreateFailed', 'InvalidCrewType', 'InvalidDamageType', 'InvalidRequiredPart', 'NeedEventOrDevice', 'NeedAddress', 'NeedCrewId', 'MoveFailed', 'AttachmentTooBig', 'AttachmentSaveError', 'AttachmentNotFound', 'Other' }

String representation of the error code

- code type int

  Error code

- reportId type long

  Damage report id associated with the error

GetDamageReportById

Returns damage report for given report id.

Operation Type: Request-response. The endpoint receives a message, and sends a correlated message.

SOAP Action: http://oms.splwg.com/ws/damage/GetDamageReportById

Input: GetDamageReportByIdRequest (soap:body, use = literal)

parameters type GetDamageReportById

reportId type long

Damage report id

Output: GetDamageReportByIdResponse (soap:body, use = literal)

parameters type GetDamageReportByIdResponse

report type damageReport

Damage assessment report (see CompleteDamageReport)

Fault: DamageServiceException (soap:fault, use = literal)

parameters type DamageServiceFault

errors - unbounded; type Error

Damage Service error

[a] error type errorCode - type string with restriction - enum { 'CreateFailed', 'CompletedEvent', 'UnknownEvent', 'BadEventType', 'LoadAffectedSetForNonOutage', 'DatabaseError', 'UnknownReportId', 'AlreadyCompleted', 'StaleData', 'IncidentCreateFailed', 'InvalidCrewType', 'InvalidDamageType', 'InvalidRequiredPart', 'NeedEventOrDevice', 'NeedAddress', 'NeedCrewId', 'MoveFailed', 'AttachmentTooBig', 'AttachmentSaveError', 'AttachmentNotFound', 'Other' }

String representation of the error code

- code type int

  Error code

- reportId type long

  Damage report id associated with the error

GetDamageReportsByHandle

Returns all damage reports for given event or device handle.

Operation Type: Request-response. The endpoint receives a message, and sends a correlated message.

SOAP Action: http://oms.splwg.com/ws/damage/GetDamageReportsByHandle

Input: GetDamageReportsByHandleRequest (soap:body, use = literal)

parameters type GetDamageReportsByHandle

handle type handle

- cls - required; type short
- index - required; type int
- app - optional; type short

  Event or device handle

Output: GetDamageReportsByHandleResponse (soap:body, use = literal)

parameters type GetDamageReportsByHandleResponse

report - optional, unbounded; type damageReport

Damage assessment report (see CompleteDamageReport)

Fault: DamageServiceException (soap:fault, use = literal)

parameters type DamageServiceFault

errors - unbounded; type Error

Damage Service error

[a] error type errorCode - type string with restriction - enum { 'CreateFailed', 'CompletedEvent', 'UnknownEvent', 'BadEventType', 'LoadAffectedSetForNonOutage', 'DatabaseError', 'UnknownReportId', 'AlreadyCompleted', 'StaleData', 'IncidentCreateFailed', 'InvalidCrewType', 'InvalidDamageType', 'InvalidRequiredPart', 'NeedEventOrDevice', 'NeedAddress', 'NeedCrewId', 'MoveFailed', 'AttachmentTooBig', 'AttachmentSaveError', 'AttachmentNotFound', 'Other' }

String representation of the error code

- code type int

  Error code

- reportId type long

  Damage report id associated with the error

GetDamageReportsByPatrol

Returns all damage reports for given patrol event index.

Operation Type: Request-response. The endpoint receives a message, and sends a correlated message.

SOAP Action: http://oms.splwg.com/ws/damage/GetDamageReportsByPatrol

Input: GetDamageReportsByPatrolRequest (soap:body, use = literal)

parameters type GetDamageReportsByPatrol

patrolEventIdx type int

Patrol event index

Output: GetDamageReportsByPatrolResponse (soap:body, use = literal)

parameters type GetDamageReportsByPatrolResponse

report - optional, unbounded; type damageReport

Damage assessment report (see CompleteDamageReport)

Fault: DamageServiceException (soap:fault, use = literal)

parameters type DamageServiceFault

errors - unbounded; type Error

Damage Service error

[a] error type errorCode - type string with restriction - enum { 'CreateFailed', 'CompletedEvent', 'UnknownEvent', 'BadEventType', 'LoadAffectedSetForNonOutage', 'DatabaseError', 'UnknownReportId', 'AlreadyCompleted', 'StaleData', 'IncidentCreateFailed', 'InvalidCrewType', 'InvalidDamageType', 'InvalidRequiredPart', 'NeedEventOrDevice', 'NeedAddress', 'NeedCrewId', 'MoveFailed', 'AttachmentTooBig', 'AttachmentSaveError', 'AttachmentNotFound', 'Other' }

String representation of the error code

- code type int

  Error code

- • reportId type long

  Damage report id associated with the error

GetRequiredParts

Returns all required parts/materials configured in NMS.

Operation Type: Request-response. The endpoint receives a message, and sends a correlated message.

SOAP Action: http://oms.splwg.com/ws/damage/GetRequiredParts

Input: GetRequiredPartsRequest (soap:body, use = literal)

parameters type GetRequiredParts

Output: GetRequiredPartsResponse (soap:body, use = literal)

parameters type GetRequiredPartsResponse

result - optional, unbounded; type requiredPart

- id type string
- name type string
- source - optional; type string

Fault: DamageServiceException (soap:fault, use = literal)

parameters type DamageServiceFault

errors - unbounded; type Error

Damage Service error

[a] error type errorCode - type string with restriction - enum { 'CreateFailed', 'CompletedEvent', 'UnknownEvent', 'BadEventType', 'LoadAffectedSetForNonOutage', 'DatabaseError', 'UnknownReportId', 'AlreadyCompleted', 'StaleData', 'IncidentCreateFailed', 'InvalidCrewType', 'InvalidDamageType', 'InvalidRequiredPart', 'NeedEventOrDevice', 'NeedAddress', 'NeedCrewId', 'MoveFailed', 'AttachmentTooBig', 'AttachmentSaveError', 'AttachmentNotFound', 'Other' }

String representation of the error code

- code type int

  Error code

- reportId type long

  Damage report id associated with the error

NewDamageReport

Returns populated damage report for given event or device. This operation does not create new damage report in NMS.

Operation Type: Request-response. The endpoint receives a message, and sends a correlated message.

SOAP Action: http://oms.splwg.com/ws/damage/NewDamageReport

Input: NewDamageReportRequest (soap:body, use = literal)

parameters type NewDamageReport

handle - optional; type handle

- cls - required; type short
- index - required; type int
- app - optional; type short

  Event or device handle

- deviceAlias - optional; type string

  Device alias (only used if handle is not provided)

- externalId - optional; type string

  Event's external id (only used if handle is not provided)

Output: NewDamageReportResponse (soap:body, use = literal)

parameters type NewDamageReportResponse

report type damageReport

Damage assessment report (see CompleteDamageReport)

Fault: DamageServiceException (soap:fault, use = literal)

parameters type DamageServiceFault

errors - unbounded; type Error

Damage Service error

[a] error type errorCode - type string with restriction - enum { 'CreateFailed', 'CompletedEvent', 'UnknownEvent', 'BadEventType', 'LoadAffectedSetForNonOutage', 'DatabaseError', 'UnknownReportId', 'AlreadyCompleted', 'StaleData', 'IncidentCreateFailed', 'InvalidCrewType', 'InvalidDamageType', 'InvalidRequiredPart', 'NeedEventOrDevice', 'NeedAddress', 'NeedCrewId', 'MoveFailed', 'AttachmentTooBig', 'AttachmentSaveError', 'AttachmentNotFound', 'Other' }

  String representation of the error code

- code type int

  Error code

- reportId type long

Damage report id associated with the error

SaveAttachments

Creates new or updates existing damage report attachments.

Operation Type: Request-response. The endpoint receives a message, and sends a correlated message.

SOAP Action: http://oms.splwg.com/ws/damage/SaveAttachments

Input: SaveAttachmentsRequest (soap:body, use = literal)

parameters type SaveAttachments

attachment - unbounded; type attachment

- data - optional; type base64Binary

  Attachment data

- description - optional; type string

  Description of the attachment

id - required; type string

Attachment id (file name)

reportId - required; type long

Damage report id

uri - optional; type anyURI

Link to the attachment. Can be used instead of passing attachment data in the message

contentType - optional; type string

MIME content type

lastModified - optional; type dateTime

Last modification timestamp

Output: SaveAttachmentsResponse (soap:body, use = literal)

Fault: DamageServiceException (soap:fault, use = literal)

parameters type DamageServiceFault

errors - unbounded; type Error

Damage Service error

[a] error type errorCode - type string with restriction - enum { 'CreateFailed', 'CompletedEvent', 'UnknownEvent', 'BadEventType', 'LoadAffectedSetForNonOutage', 'DatabaseError', 'UnknownReportId', 'AlreadyCompleted', 'StaleData', 'IncidentCreateFailed', 'InvalidCrewType', 'InvalidDamageType', 'InvalidRequiredPart', 'NeedEventOrDevice', 'NeedAddress', 'NeedCrewId', 'MoveFailed', 'AttachmentTooBig', 'AttachmentSaveError', 'AttachmentNotFound', 'Other' }

String representation of the error code

- code type int

  Error code

- reportId type long

  Damage report id associated with the error

SaveDamageReport

Creates new or updates existing damage report. This operation cannot be used to complete an existing damage report.

Operation Type: Request-response. The endpoint receives a message, and sends a correlated message.

SOAP Action: http://oms.splwg.com/ws/damage/SaveDamageReport

Input: SaveDamageReportRequest (soap:body, use = literal)

parameters type SaveDamageReport

report type damageReport

Damage assessment report (see CompleteDamageReport)

action - optional; type string

Action to trigger state transition

Output: SaveDamageReportResponse (soap:body, use = literal)

parameters type SaveDamageReportResponse

report type damageReport

Damage assessment report (see CompleteDamageReport)

Fault: DamageServiceException (soap:fault, use = literal)

parameters type DamageServiceFault

errors - unbounded; type Error

Damage Service error

[a] error type errorCode - type string with restriction - enum { 'CreateFailed', 'CompletedEvent', 'UnknownEvent', 'BadEventType', 'LoadAffectedSetForNonOutage', 'DatabaseError', 'UnknownReportId', 'AlreadyCompleted', 'StaleData', 'IncidentCreateFailed', 'InvalidCrewType', 'InvalidDamageType', 'InvalidRequiredPart', 'NeedEventOrDevice', 'NeedAddress', 'NeedCrewId', 'MoveFailed', 'AttachmentTooBig', 'AttachmentSaveError', 'AttachmentNotFound', 'Other' }

String representation of the error code

- code type int

  Error code

- reportId type long

  Damage report id associated with the error

GetRepairTimeConfig

Returns damage assessment repair time configuration.

Operation Type: Request-response. The endpoint receives a message, and sends a correlated message.

SOAP Action: http://oms.splwg.com/ws/damage/GetRepairTimeConfig

Input: GetRepairTimeConfigRequest (soap:body, use = literal)

parameters type GetRepairTimeConfig

Output: GetRepairTimeConfigResponse (soap:body, use = literal)

parameters type GetRepairTimeConfigResponse

result - optional, unbounded; type damageRepairTime

- assetType type string
- accessibleRepairTime type int
- inaccessibleRepairTime type int
- deviceClass type int

Fault: DamageServiceException (soap:fault, use = literal)

parameters type DamageServiceFault

errors - unbounded; type Error

Damage Service error

[a] error type errorCode - type string with restriction - enum { 'CreateFailed',

'CompletedEvent', 'UnknownEvent', 'BadEventType', 'LoadAffectedSetForNonOutage',

'DatabaseError', 'UnknownReportId', 'AlreadyCompleted', 'StaleData',

'IncidentCreateFailed', 'InvalidCrewType', 'InvalidDamageType', 'InvalidRequiredPart',

'NeedEventOrDevice', 'NeedAddress', 'NeedCrewId', 'MoveFailed',

'AttachmentTooBig', 'AttachmentSaveError', 'AttachmentNotFound', 'Other' }

String representation of the error code

- code type int

  Error code

- reportId type long

  Damage report id associated with the error

Chapter 14

REST API

Oracle Utilities Network Management System REST API exposes a subset of NMS functionality in form of RESTful web services. NMS resources, with some exceptions (e.g., images represented in binary form), are represented in JSON format.

The base URL for accessing the REST API is

```
https://<server>:<port>/nms-ws
```

- <server> - DNS name or IP address of the WebLogic server where nms-ws.ear is running.
- <port> - SSL port of the WebLogic server

This chapter includes the following topics:

- Authentication
- Resources

Authentication

In order to invoke Oracle Utilities Network Management System REST API, the caller needs to be authenticated using valid Oracle Utilities Network Management System mobile user credentials. HTTP Basic Authentication protocol is used for authentication. Since HTTP Basic Authentication does not encrypt credentials, the HTTPS transport should be used.

If using BASIC Authentication, the Header would look like this:

```
Authorization: Basic <credentials> <app-key>
```

If using IDCS or another OAuth2 Authentication provider, you can pass the token Authentication like this:

```
Authorization: <TokenType> <Token> <app-key> <LoginName>
```

Resources

- GET /dmg-rest/reports
- POST /dmg-rest/reports
- GET /dmg-rest/reports/{id}
- POST /dmg-rest/reports/{id}
- GET /dmg-rest/reports/{id}/attachments/{att_id}
- PUT /dmg-rest/reports/{id}/attachments/{att_id}
- DELETE /dmg-rest/reports/{id}/attachments/{att_id}
- GET /dmg-rest/reports/required-parts
- GET /dmg-rest/reports/config/{cfg}
- GET /mobile/attachments/{report-type}/{report-id}/{attachment-id}
- PUT /mobile/attachments/{report-type}/{report-id}/{attachment-id}
- DELETE /mobile/attachments/{report-type}/{report-id}/{attachment-id}
- GET /mobile/control-zones
- GET /mobile/dataset/{table}
- PUT /mobile/dataset/{table}
- GET /mobile/feeders
- GET /mobile/confirm-services/{handle}
- PUT /mobile/confirm-services
- GET /mobile/conditions
- GET /mobile/conditions/device/{handle}
- GET /mobile/conditions/{class}
- POST /mobile/condition/{class}
- PUT /mobile/condition/{class}/{id}/{status}
- GET /mobile/crews/{id}/availability
- POST /mobile/crews/{id}/availability
- GET /mobile/crews/{id}/status
- POST /mobile/crews/{id}/status
- GET /mobile/get-permissions
- GET /mobile/mobile-user-validation
- GET /mobile/create-new-account
- GET /mobile/set-current-crew/{id}
- GET /mobile/damage-device-details
- GET /mobile/devices
- GET /mobile/crew-types
- GET /mobile/maps
- GET /mobile/crews
- GET /mobile/crews/{id}
- GET /mobile/crews/user/{user id}
- GET /mobile/crews/{id}/assignments
- POST /mobile/crews/{id}/assignments/{event-id}/dispatch
- POST /mobile/crews/{id}/assignments/{event-id}/onsite
- POST /mobile/crews/{id}/assignments/{event-id}/undispatch
- POST /mobile/crews/{id}/assignments/{event-id}/assign
- POST /mobile/crews/{id}/assignments/{event-id}/unassign
- POST /mobile/crews/{id}/assignments/{event-id}/undispatch-and-assign
- POST /mobile/crews/{id}/assignments/{event-id}/undispatch-and-assign-and-dispatch/{new-event-id}

- GET /trbl-rest/events/{id}
- POST /trbl-rest/events/{id}
- PUT /trbl-rest/events/{id}/trouble-queue
- GET /trbl-rest/config/{cfg}
- GET /mobile/version
- GET /mobile/application-version/{name}/{arch}
- GET /mobile/application-versions/{name}/{arch}
- GET /mobile/application/{name}/{arch}
- GET /mobile/application/{name}/{arch}/{version}
- POST /mobile/mobile-user-logout
- PUT /mobile/user-profile/{field-name}/{value}
- GET /mobile/device/{id}/info
- GET /mobile/device/{id}/operate/{operation}/phases/{phases}/time/{time}
- GET /mobile/device/{id}/lookahead/{operation}/{phases}
- POST /mobile/device/statuses
- GET /mobile/{id}/customers
- GET /mobile/maps/{mapname}
- GET /mobile/file/:dir_name /:file_name
- POST /mobile/crew
- GET /mobile/condition/{class}/{id}
- PUT /mobile/condition/{class}/{id}/text/{text}
- DELETE /mobile/condition/{class}/{id}
- GET /mobile/switch-sheets/assignments/{crew-key}
- POST /mobile/switch-sheets/{sheet-class}/{sheet-index}/steps/{step-class}/{step-index}
- POST /mobile/switch-sheets/{sheet-class}/{sheet-index}/steps/{step-class}/{step-index}/details
- POST /mobile/switch-sheets/{sheet-class}/{sheet-index}/transition
- GET /mobile/switch-sheets/{sheet-class}/{sheet-index}/report
- GET /mobile/switch-sheets/{sheet-class}/{sheet-index}/document/{document-id}
- PUT /mobile/switch-sheets/{sheet-class}/{sheet-index}/document
- POST /mobile/hlm
- GET /mobile/nms-status
- GET /mobile/lookup-types/{table}/{keyField}/{valueField}
- GET /mobile/nms-status
- POST /trbl-rest/event/{id}/log
- POST /trbl-rest/event/{id}/log-once
- POST /trbl-rest/event/{id}/state-transition
- GET /trbl-rest/events/{id}/customers
- POST /trbl-rest/user-log
- POST /trbl-rest/user-log-once
- POST /trbl-rest/events/{id}/associate

Post /dmg-rest/event-update/{event}

Update all active customer damage reports for the passed event, using the passed action.

Parameters

action | query[string] | the action string (like assessed, failed, and so on)

Error Response

- **Code:** 401 Unauthorized

  User is not authorized to perform the request.
- **Code:** 500 Internal Server Error

  Unspecified error has occurred.

POST /dmg-rest/event-update/{event}

Update all active customer damage reports for the passed event, using the passed action.

Parameters

action | query[string] | the action string (like assessed, failed, and so on).

Error Response

- **Code:** 401 Unauthorized

  User is not authorized to perform the request.
- **Code:** 500 Internal Server Error

  Unspecified error has occurred.

GET /dmg-rest/reports

Retrieves damage reports or given query parameters.

Supported query types:

- Location - returns damage reports within the given radius from the specified location. Parameters lat, long, and rad are required for this query type.
- Patrol - returns damage reports associated with the given patrol event. Parameter patrol is request for this query type.
- Event - returns damage reports associated with the given event. Parameter event is request for this query type.

  Note: Parameters from different query types cannot be mixed (for example, it is not possible to request damage reports for a patrol event which are location near specific point).

Parameters

Name	Type	Description
lat	query[floating-point]	Latitude of the location.
long	query[floating-point]	Longitude of the location.
rad	query[floating-point]	Radius in meters.
event	query[integer]	Event index.
patrol	query[integer]	Patrol event index.
device	query[string]	Device handle.

Success Response

- **Code:** 200

  Content: Array of JSON objects representing damage reports.

Error Response

- **Code:** 401 Unauthorized

  User is not authorized to perform the request.
- **Code:** 500 Internal Server Error

  Unspecified error has occurred.

POST /dmg-rest/reports

Creates new damage report.

Parameters

Name	Type	Description
unnamed required	data[a]	JSON representation of a damage report.
action	query[string]	State transition action when saving damage report (for example, assess).

a. 'data' parameters represent the body of a POST or PUT request. Such parameters do not have a name thus 'unnamed' in the list of parameters.

Success Response

- **Code:** 201 Created

  Content: JSON representation of the created damage report.

Error Response

- **Code:** 401 Unauthorized

  User is not authorized to perform the request.
- **Code:** 500 Internal Server Error

Unspecified error has occurred.

GET /dmg-rest/reports/{id}

Retrieves existing damage report by id.

Parameters

Name	Type	Description
id required	path[integer]	Damage report identifier.

Success Response

- **Code:** 200

  Content: JSON or XML representation of a damage report.

Error Response

- **Code:** 204 No Content

  Damage report with the given identifier were not found.
- **Code:** 401 Unauthorized

  User is not authorized to perform the request.
- **Code:** 500 Internal Server Error

  Unspecified error has occurred.

POST /dmg-rest/reports/{id}

Updates existing damage report.

Parameters

Name	Type	Description
id required	path[integer]	Damage report identifier.
action	query[string]	State transition action when saving damage report (for example, assess).
unnamed required	data	JSON representation of a damage report.

Success Response

- **Code:** 200

  Content: JSON representation of a damage report.

Error Response

- **Code:** 204 No Content

  Damage report with the given identifier were not found.

- **Code:** 401 Unauthorized

  User is not authorized to perform the request.
- **Code:** 500 Internal Server Error

  Unspecified error has occurred.

GET /dmg-rest/reports/{id}/attachments/{att_id}

Retrieves content of an existing damage report attachment.

Parameters

Name	Type	Description
id required	path[integer]	Damage report identifier.
att_id required	path[string]	Attachment name/identifier.
w	query[string]	If image, reduce width to w pixels.
h	query[string]	If image, reduce height to h pixels.

Success Response

- **Code:** 200

  Content: Binary attachment data (*e.g.*, image)

Error Response

- **Code:** 204 No Content.

  Requested attachment does not exist.
- **Code:** 401 Unauthorized

  User is not authorized to perform the request.
- **Code:** 500 Internal Server Error

  Unspecified error has occurred.

PUT /dmg-rest/reports/{id}/attachments/{att_id}

Uploads contents of a damage report attachment.

> Note: This API only uploads the binary attachment data to the server. The list of attachments is part of the damage report itself.

Parameters

Name	Type	Description
id required	path[integer]	Damage report identifier.
att_id required	path[string]	Attachment name/identifier.
unnamed required	data	Attachment data.

Success Response

- **Code:** 201 Created

Error Response

- **Code:** 204 No Content.

  Requested attachment does not exist.
- **Code:** 401 Unauthorized

  User is not authorized to perform the request.
- **Code:** 500 Internal Server Error

  Unspecified error has occurred.

DELETE /dmg-rest/reports/{id}/attachments/{att_id}

Deletes a damage report attachment.

Parameters

Name	Type	Description
id required	path[integer]	Damage report identifier.
att_id required	path[string]	Attachment name/identifier.

Success Response

- **Code:** 204 No Content

Error Response

- **Code:** 401 Unauthorized

  User is not authorized to perform the request.
- **Code:** 500 Internal Server Error

  Unspecified error has occurred.

GET /dmg-rest/reports/required-parts

Retrieves list of required parts and materials which are configured in NMS.

Parameters

None.

Success Response

- **Code:** 200

  Content: Array of JSON objects representing all known required parts

Error Response

- **Code:** 401 Unauthorized

  User is not authorized to perform the request.
- **Code:** 500 Internal Server Error

  Unspecified error has occurred.

GET /dmg-rest/reports/config/{cfg}

Parameters

Name	Type	Description
cfg	path[string]	Type of configuration items to return.

Available types of configuration items:

- repair-times: damage assessment repair time configuration from the DAMAGE_REPAIR_TIMES_VIEW database view
- asset_statuses: records from the MESSAGE_CODE_LOOKUP where MESSAGE_TOPIC equals 'DA_ASSET_STATUS'
- asset_conditions: records from the MESSAGE_CODE_LOOKUP where MESSAGE_TOPIC equals 'DA_ASSET_CONDITION'
- phases: phase labels from PHASE_BITMAP_LOOKUP table

Success Response

- **Code:** 200 Content: Array of JSON objects representing requested configuration items.
- **Code:** 204 No Content

  Nothing found for the requested configuration type.

Error Response

- **Code:** 401 Unauthorized

  User is not authorized to perform the request.
- **Code:** 500 Internal Server Error

  Unspecified error has occurred.

GET /mobile/subscribe-partition-changes

Subscribe to the NMS server for all partition changes including items like real time switch status, model builds, and condition changes.

Parameters

None

Response

Will return a subscription ID string to be used to get the changes and to unsubscribe.

GET /mobile/messages-partition-changes/{sub-id}

Given a subscription ID, get an object from NMS server containing the request status and an array of all partition changes including items like real time switch status, model builds, and condition changes.

Parameters

sub-id|path[string]|A subscription ID from the GET:mobile/subscribe-partition-changes call.

Response

Will return an object containing the request status and an array of all partition changes including items like real time switch status, model builds, and condition changes.

GET /mobile/unsubscribe-partition-changes/{sub-id}

Unsubscribe from the NMS server for partition changes.

Parameters

sub-id|path[string]|A subscription ID from the GET:mobile/subscribe-partition-changes call.

Response

Will return an object containing the request status.

GET /mobile/attachments/{report-type}/{report-id}/{attachment-id}

Get attachment from the nms_attachments table for the given report.

Parameters

Name	Type	Description
report-type	path[string]	Report type to get attachment for; for example, DA or TE.
report-id required	path[integer]	Report index to get attachment for
attachment-id required	path[string]	Attachment ID of requested attachment.
w optional	query[Integer]	If image, reduce the width to this value, if not provided, no reduction.
h optional	query[Integer]	If image, reduce the height to this value, if not provided, no reduction.

Response

Content: byte[] of the attachment data

- **Code:** 200 The return value will be the attachment.
- **Code:** 500 Unspecified service error has occurred.

  Content may describe the issue encountered.

POST /mobile/device/{handle}/trace

Request a server trace from the given device handle.

Parameters

handle|path[handle]|handle of the device to initiate the trace from.

Format: class.index. ie 147.1234.

type|query[string]|Type of trace to perform. Can be one of the following: source, all, opens, or classes

phase|query[integer]|phases to perform trace on. Numbers may include 1 for A phase, 2, for B phase, 3 for AB phases, 4 for C phase, 5 for AC phases, 6 for BC phases and 7 for ABC phases.

direction|query[string]|The direction to trace, can be one of the following: all, up, down.

data|data|List of Stop Class Names

Response

Java TraceResults in JSON format including list of endpoints, list of traced objects, and list of abnormal open switches

PUT /mobile/attachments/{report-type}/{report-id}/{attachment-id}

Put a new attachment from the nms_attachments table for the given report.

Parameters

Name	Type	Description
report-type	path[string]	Report type to get attachment for; for example, DA or TE.
report-id required	path[integer]	Report index to get attachment for
attachment-id required	path[string]	Attachment ID of requested attachment. Must be unique for the given report ID.
uri optional	query[uri]	URI to use for a link attachment
desc optional	query[string]	Description to use for the attachment.
attachment	data[byte[]]	Data used for the attachment. Not used for link attachments.

Response

- **Code:** 201 The attachment was successfully saved
- **Code:** 500 Unspecified service error has occurred.

  Content may describe the issue encountered.

DELETE /mobile/attachments/{report-type}/{report-id}/{attachment-id}

Delete an attachment from the nms_attachments table for the given report.

Parameters

Name	Type	Description
report-type	path[string]	Report type to delete attachment for; for example, DA or TE.
report-id required	path[integer]	Report index to delete attachment for
attachment-id required	path[string]	Attachment ID of attachment to delete.

Response

- **Code:** 204 The request was completedt.
- **Code:** 500 Unspecified service error has occurred.

  Content may describe the issue encountered.

GET /mobile/control-zones

Retrieves list of control zones NMS.

Parameters

None.

Success Response

- **Code:** 200

  Content: Array of JSON objects representing all NMS control zones

Error Response

- **Code:** 401 Unauthorized

  User is not authorized to perform the request.
- **Code:** 500 Internal Server Error

  Unspecified error has occurred.

GET /mobile/dataset/{table}

Get records from the given table where the key-field matches the key-value based on the match type. The table must appear in the mobile_datasets whilelist table.

Parameters

Name	Type	Description
table required	path[string]	Table name to return record for.
key-field required	query[string]	Field name to use as the selection criteria for the returned records.
key-value required	query[string]	value matched to the key-field as the selection criteria for the returned records.
match-type optional	query[string]	The match type to use. Options: `equals`, `not-equals`, `like`, `not-like`, or `all`. Default value is equals.
max-rows optional	query[integer]	Limit the number of rows returned to this value. Default value is 100.

Response

- **Code:** 200 The return value will a list of record sets.
- **Code:** 500 Unspecified service error has occurred.

  Content may describe the issue encountered.

PUT /mobile/dataset/{table}

Replace records for the given table where the key-field equals the key-value. The table must appear in the mobile_datasets whilelist table.

Parameters

Name	Type	Description
table required	path[string]	Table name to update record for.
key-field required	query[string]	Field name to use as the selection criteria for the returned records.
key-value required	query[string]	Value matched to the key-field as the selection criteria for the returned records.
data required	data	List of records (EBJResultSet) to replace in the database dataset with selection_set, column_names and serialVersionUID set. Column widths and type not required.

Success Response

- **Code:** 200: OK

Error Response

- **Code:** 500: Internal Server Error

  Content may describe the issue encountered.

GET /mobile/feeders

Retrieves list of feeders with attributes (h_cls, h_idx, feeder_name, substation_name, color, group_num, and abnormal_color).

Parameters

None.

Success Response

- **Code:** 200
- **Content:** Array of JSON objects representing all NMS feeders

Error Response

- **Code:** 401 Unauthorized

  User is not authorized to perform the request.
- **Code:** 500 Internal Server Error

  Unspecified error has occurred.

GET /mobile/confirm-services/{handle}

Get a list of customers with secondary and service outage details for the given device or event handle.

Parameters

Name	Type	Description
handle required	path[Handle string]	Handle of a device or event to get the customers for.
max-supply-nodes optional	query[integer]	Maximum number of supply nodes to return the customer list from. Defaults to 100.

Response

- **Code:** 200 The return value will be a object of customer IDs with a list of customer details. The details will include one for the customerId and additional customer details is the customer is involved with an existing service or secondary event.
- **Code:** 204 No customers for the given device or event handle
- **Code:** 500 Unspecified service error has occurred

PUT /mobile/confirm-services

Update service and secondary events for the given list of services.

Parameters

Name	Type	Description
action required	query[service, secondary, restore, groupable]	Action to perform on the list of customer updates.
crew optional	query[integer]	Crew key of the crew to be assigned to newly created events.
as-user optional	query[string]	User to do the API call as. The calling user must have "Allow as-user Parameter" mobile permission.
updates required	data[updates]	A list of customer service updates.

Example


```
[{"cust_id":"2001637-2001637-2001637","address":"10586 MOGADORE AVE
NW, Lake Twp., OH, 44685","ctype":"","comment":"confirmed
outage","device":{"class_number":207,"app":0,"instance_number":2217},"
event":{"class_number":800,"app":0,"instance_number":2750},"bitmask":0
}]
```


Success Response

- **Code:** 200: OK
- **Content:** OK

Error Response

- **Code:** 401 Unauthorized

  User is not authorized to perform the request
- **Code:** 500 Internal Server Error

  Unspecified service error has occurred

GET /mobile/conditions

Retrieves conditions for given geographical area.

Parameters

Name	Type	Description
lat1 required	query[floating-point]	Latitude of the top left corner of the area
lat2 required	query[floating-point]	Latitude of the bottom right corner of the area.
long1 required	query[floating-point]	Longitude of the top left corner of the area
long2 required	query[floating-point]	Longitude of the bottom right corner of the area
qt optional	query[string]	Query type. Valid values: • **da:** damage reports • **event:** events • **incident:** calls and other incidents • **truck:** truck dispatch locations All conditions are returned if this parameter is not provided.

Success Response

- **Code:** 200

  Content: Array of JSON objects representing conditions.

Error Response

- **Code:** 401 Unauthorized

  User is not authorized to perform the request.
- **Code:** 500 Internal Server Error

  Unspecified error has occurred.

GET /mobile/conditions/device/{handle}

Returns a list of conditions on the specified device handle

Parameters

Name	Type	Description
handle required	path[hande]	Handle of the device to get conditions for; for example, 148.1001.

Response

- **Code:** 200 The return data will be a list of conditions.

GET /mobile/conditions/{class}

Returns a list of conditions for the requesting authentication user name of the given condition class.

Parameters

Name	Type	Description
class	path[string]	Name of the class of conditions.

Response

- 200: The return data will be a list of conditions

POST /mobile/condition/{class}

Create a condition with the given class, status, and text for the given device.

Parameters

Name	Type	Description
:class	path[string]	Name of the class of conditions
status	query[integer]	Status of the class
dev-class	query[integer]	Handle Class number of the device
dev-index	query[integer]	Handle Index number of the device
text	path[string]	Text to be saved with the condition
as-user optional	query[string]	User to do the API call as. The calling user must have "Allow as-user Parameter" mobile permission.

Response

- 200: Returns the condition index of the new condition created.

PUT /mobile/condition/{class}/{id}/{status}

Updates the given condition's status to the given status.

Parameters

Name	Type	Description
class	path[string]	Class Name of the condition
id	path[integer]	Id of the condition
status	path[integer]	The new status of the condition
as-user optional	query[string]	User to do the API call as. The calling user must have "Allow as-user Parameter" mobile permission.

Response

- 200: No content returned

GET /mobile/crews/{id}/availability

Retrieves the current availability information for a crew.

Parameters

Name	Type	Description
id required	path[integer]	Crew key.

Success Response

- **Code:** 200

  Content: Crew availability information in JSON format.

Error Response

- **Code:** 401 Unauthorized

  User is not authorized to perform the request.
- **Code:** 500 Internal Server Error

  Unspecified error has occurred.

POST /mobile/crews/{id}/availability

Updates the current availability information for a crew.

Parameters

Name	Type	Description
id required	path[integer]	Crew key.
unnamed required	data	Crew availability information in JSON format
as-user optional	query[string]	User to do the API call as. The calling user must have "Allow as-user Parameter" mobile permission.

Success Response

- **Code:** 200

  Content: Crew availability information in JSON format.

Error Response

- **Code:** 401 Unauthorized

  User is not authorized to perform the request.
- **Code:** 500 Internal Server Error

  Unspecified error has occurred.

GET /mobile/crews/{id}/status

Retrieves the current status of a crew.

Parameters

Name	Type	Description
id required	path[integer]	Crew key.

Success Response

- **Code:** 200

  Content: Crew status information in JSON format. Possible crew statuses: Inactive, OnShift, OffShift.

Error Response

- **Code:** 401 Unauthorized

  User is not authorized to perform the request.
- **Code:** 500 Internal Server Error

  Unspecified error has occurred.

POST /mobile/crews/{id}/status

Updates current status of a crew.

Parameters

Name	Type	Description
id required	path[integer]	Crew key.
unnamed required	data	Crew status information in JSON format. Valid crew statuses: • OnShift • OffShift • Inactive
as-user optional	query[string]	User to do the API call as. The calling user must have "Allow as-user Parameter" mobile permission.

Success Response

- **Code:** 200

  Content: Crew status information in JSON format.

Error Response

- **Code:** 401 Unauthorized

  User is not authorized to perform the request.
- **Code:** 500 Internal Server Error

  Unspecified error has occurred.

GET /mobile/get-permissions

Retrieves permissions of the mobile user.

Parameters

Name	Type	Description
as-user optional	query[string]	User to do the API call as. The calling user must have "Allow as-user Parameter" mobile permission.

Success Response

- **Code:** 200

  Content: List of permissions assigned to the mobile user.

Error Response

- **Code:** 401 Unauthorized

  User is not authorized to perform the request.

- **Code:** 500 Internal Server Error

  Unspecified error has occurred.

GET /mobile/mobile-user-validation

Performs validation of user credentials.

Parameters

None

Success Response

- **Code:** 200

  Content: User information in JSON format. If validation is unsuccessful value -2 is returned in the userId field.

Error Response

- **Code:** 500 Internal Server Error

  Unspecified error has occurred.

  Note: This request does not require Authorization header.

GET /mobile/create-new-account

Creates new account with the specified username and password. The server checks whether the provided user key is valid and have not exhausted its account creation quota.

Parameters

Name	Type	Description
new-user-key required	query[string]	User key.

Success Response

- **Code:** 200

  Content: User information in JSON format. If account creation is unsuccessful negative value is returned in the userId field.

Error Response

- **Code:** 500 Internal Server Error

  Unspecified error has occurred.

  Note: This request does not require Authorization header.

GET /mobile/set-current-crew/{id}

Sets crew associated with this mobile user.

Parameters

Name	Type	Description
id required	path[integer]	Crew key.

Success Response

- **Code:** 200

  Content: Crew information in JSON format.

Error Response

- **Code:** 401 Unauthorized

  User is not authorized to perform the request.
- **Code:** 500 Internal Server Error

  Unspecified error has occurred.

GET /mobile/damage-device-details

Retrieves device information for given alias.

Parameters

Name	Type	Description
device-id required	query[string]	Device alias.

Success Response

- **Code:** 200

  Content: Device information in JSON format.

Error Response

- **Code:** 401 Unauthorized

  User is not authorized to perform the request.
- **Code:** 500 Internal Server Error

  Unspecified error has occurred.

PUT /mobile/device/assess

Updates the passed conductors to the assessed state.

Parameters

Name	Type	Description
handles required	data	The conductor handles to update.

Response

- **200:** No content returned

PUT /mobile/device/unassess

Updates the passed conductors to clear the assessed state.

Parameters

Name	Type	Description
handles required	data	The conductor handles to update.

Response

- **200:** No content returned

GET /mobile/devices

Retrieves information for devices matching given device alias search string.

Parameters

Name	Type	Description
device-id required	query[string]	Device alias search string (can contain SQL wildcard characters).

Success Response

- **Code:** 200

  Content: Array of JSON objects representing device information.

Error Response

- **Code:** 401 Unauthorized

  User is not authorized to perform the request.
- **Code:** 500 Internal Server Error

  Unspecified error has occurred.

GET /mobile/crew-types

Retrieves list of crew types configured in NMS.

Parameters

None.

Success Response

- **Code:** 200

  Content: Array of JSON objects representing crew types.

Error Response

- **Code:** 401 Unauthorized

  User is not authorized to perform the request.
- **Code:** 500 Internal Server Error

  Unspecified error has occurred.

GET /mobile/maps

Retrieves list of map definition objects.

Parameters

None.

Success Response

- **Code:** 200

  Content: Array of JSON objects representing map definitions.

Error Response

- **Code:** 401 Unauthorized

  User is not authorized to perform the request.
- **Code:** 500 Internal Server Error

  Unspecified error has occurred.

GET /mobile/crews

Retrieves list of crews present in NMS. Depending on permissions of the mobile user either all or only MDT crews are returned.

Parameters

None.

Success Response

- **Code:** 200

  Content: Array of JSON objects representing crews.

Error Response

- **Code:** 401 Unauthorized

  User is not authorized to perform the request.
- **Code:** 500 Internal Server Error

  Unspecified error has occurred.

GET /mobile/crews/{id}

Retrieves information for a crew.

Parameters

Name	Type	Description
id required	path[integer]	Crew key.

Success Response

- **Code:** 200

  Content: Crew information in JSON format.

Error Response

- **Code:** 401 Unauthorized

  User is not authorized to perform the request.
- **Code:** 500 Internal Server Error

  Unspecified error has occurred.

GET /mobile/crews/user/{user id}

Retrieves crew information for a mobile user.

Parameters

Name	Type	Description
id required	path[string]	User name

Success Response

- **Code:** 200

  Content: Crew information in JSON format.

Error Response

- **Code:** 401 Unauthorized

  User is not authorized to perform the request.

- **Code:** 500 Internal Server Error

  Unspecified error has occurred.

GET /mobile/crews/{id}/assignments

Retrieves list of current assignments for a crew.

Parameters

Name	Type	Description
id required	path[integer]	Crew key.
include-unsent-assignments optional	query[boolean]	If value is true, include events assigned to the crew, but not yet sent to the crew.

Success Response

- **Code:** 200

  Content: Array of JSON objects representing crew assignments.

Error Response

- **Code:** 401 Unauthorized

  User is not authorized to perform the request.
- **Code:** 500 Internal Server Error

  Unspecified error has occurred.

POST /mobile/crews/{id}/assignments/{event-id}/dispatch

Places a crew en-route to an event.

Parameters

Name	Type	Description
id required	path[integer]	Crew key.
event-id required	path[integer]	Event index.
as-user optional	query[string]	User to do the API call as. The calling user must have "Allow as-user Parameter" mobile permission.
time optional	query[long]	Time the assignment change occurred. Zero means current time. The value is the number of milliseconds since 1 January 1970 00:00:00.000.
include-unsent-assignments optional	query[boolean]	If value is true, in the return value, include events assigned to the crew but not yet sent to the crew.

Success Response

- **Code:** 200

  Content: Array of JSON objects representing crew assignments.

Error Response

- **Code:** 401 Unauthorized

  User is not authorized to perform the request.
- **Code:** 500 Internal Server Error

  Unspecified error has occurred.

POST /mobile/crews/{id}/assignments/{event-id}/onsite

Places a crew onsite for an event.

Parameters

Name	Type	Description
id required	path[integer]	Crew key.
event-id required	path[integer]	Event index.
as-user optional	query[string]	User to do the API call as. The calling user must have "Allow as-user Parameter" mobile permission.
time optional	query[long]	Time the assignment change occurred. Zero means current time. The value is the number of milliseconds since 1 January 1970 00:00:00.000.
include-unsent-assignments optional	query[boolean]	If value is true, in the return value, include events assigned to the crew, but not yet sent to the crew.

Success Response

- **Code:** 200

  Content: Array of JSON objects representing crew assignments.

Error Response

- **Code:** 401 Unauthorized

  User is not authorized to perform the request.
- **Code:** 500 Internal Server Error

  Unspecified error has occurred.

POST /mobile/crews/{id}/assignments/{event-id}/undispatch

Makes a crew no longer en-route or onsite for an event.

Parameters

Name	Type	Description
id required	path[integer]	Crew key.
event-id required	path[integer]	Event index.
as-user optional	query[string]	User to do the API call as. The calling user must have "Allow as-user Parameter" mobile permission.
time optional	query[long]	Time the assignment change occurred. Zero means current time. The value is the number of milliseconds since 1 January 1970 00:00:00.000.
include-unsent-assignments optional	query[boolean]	If value is true, in the return value, include events assigned to the crew but not yet sent to the crew.
include-related optional	query[boolean]	If value is true, undispatch related events for the crew too.

Success Response

- **Code:** 200

  Content: Array of JSON objects representing crew assignments.

Error Response

- **Code:** 401 Unauthorized

  User is not authorized to perform the request.
- **Code:** 500 Internal Server Error

  Unspecified error has occurred.

POST /mobile/crews/{id}/assignments/{event-id}/assign

Adds assignment of a crew to an event.

Parameters

Name	Type	Description
id required	path[integer]	Crew key.
event-id required	path[integer]	Event index.
as-user optional	query[string]	User to do the API call as. Calling user must have "Allow as-user Parameter" mobile permission.
time optional	query[long]	Time the assignment change occurred. Zero means current time. The value is the number of milliseconds since 1 January 1970 00:00:00.000.
include-unsent-assignments optional	query[boolean]	If value is true, in the return value, include events assigned to the crew, but not yet sent to the crew.
include-related optional	query[boolean]	If value is true, undispatch related events for the crew too.

Success Response

- **Code:** 200

  Content: Array of JSON objects representing crew assignments.

Error Response

- **Code:** 401 Unauthorized

  User is not authorized to perform the request.
- **Code:** 500 Internal Server Error

  Unspecified error has occurred.

POST /mobile/crews/{id}/assignments/{event-id}/unassign

Removes assignment of a crew to an event.

Parameters

Name	Type	Description
id required	path[integer]	Crew key.
event-id required	path[integer]	Event index.
as-user optional	query[string]	User to do the API call as. The calling user must have "Allow as-user Parameter" mobile permission.
time optional	query[long]	Time the assignment change occurred. Zero means current time. The value is the number of milliseconds since 1 January 1970 00:00:00.000
suspend optional	query[string]	Whether to suspend the event and crew, when applicable. If no other crews are assigned to the event, it will transition to the SUS state. If the crew is not assigned to other events, the crew will become Suspended.
include-unsent-assignments optional	query[boolean]	If value is true, in the return value, include events assigned to the crew, but not yet sent to the crew.
include-related optional	query[boolean]	If value is true, undispatch related events for the crew too.

Success Response

- **Code:** 200

  Content: Array of JSON objects representing remaining crew assignments.

Error Response

- **Code:** 401 Unauthorized

  User is not authorized to perform the request.
- **Code:** 500 Internal Server Error

  Unspecified error has occurred.

POST /mobile/crews/{id}/assignments/{event-id}/undispatch-and-assign

Makes a crew no longer en-route or onsite for an event but keeps the assignment of the crew to the event.

Parameters

Name	Type	Description
id required	path[integer]	Crew key.
event-id required	path[integer]	Event index.
as-user optional	query[string]	User to do the API call as. The calling user must have "Allow as-user Parameter" mobile permission.
time optional	query[long]	Time the assignment change occurred. Zero means current time. The value is the number of milliseconds since 1 January 1970 00:00:00.000
include-unsent-assignments optional	query[boolean]	If value is true, in the return value, include events assigned to the crew, but not yet sent to the crew.

Success Response

- **Code:** 200

  Content: Array of JSON objects representing crew assignments.

Error Response

- **Code:** 401 Unauthorized

  User is not authorized to perform the request.
- **Code:** 500 Internal Server Error

  Unspecified error has occurred.

POST /mobile/crews/{id}/assignments/{event-id}/undispatch-and-assign-and-dispatch/{new-event-id}

Places crew en-route to a different event.

Parameters

Name	Type	Description
id required	path[integer]	Crew key.
event-id required	path[integer]	Original event index.
new-event-id required	path[integer]	New event index.
as-user optional	query[string]	User to do the API call as. The calling user must have "Allow as-user Parameter" mobile permission.
time optional	query[long]	Time the assignment change occurred. Zero means current time. The value is the number of milliseconds since 1 January 1970 00:00:00.000.
include-unsent-assignments optional	query[boolean]	If value is true, in the return value, include events assigned to the crew, but not yet sent to the crew.

Success Response

- **Code:** 200

  Content: Array of JSON objects representing crew assignments.

Error Response

- **Code:** 401 Unauthorized

  User is not authorized to perform the request.
- **Code:** 500 Internal Server Error

  Unspecified error has occurred.

GET /trbl-rest/events/{id}

Retrieves an event with the given index.

Parameters

Name	Type	Description
id required	path[integer]	Event index.
max_calls	query[integer]	Maximum number of calls to return about the event. Default: 10.
include-unsent-assignments optional	query[boolean]	If value is true, include events assigned to the crew, but not yet sent to the crew.
extended	query[char]	If value is 'Y', will return the NMS TroubleEvent structure in addition to the Event structure.
include-all-relatedevents optional	query[char]	If value is 'Y', will return an array of all related events.

Success Response

- **Code:** 200

  Content: JSON representation of an NMS event or the NMS Event and TroubleEvent.

Error Response

- **Code:** 204 No Content

  Event with the given index was not found.
- **Code:** 401 Unauthorized

  User is not authorized to perform the request.
- **Code:** 500 Internal Server Error

  Unspecified error has occurred.

POST /trbl-rest/events/all-events

Retrieves a list of events with the given indexes.

Parameters

Name	Type	Description
unnamed required	data	List of event ids in JSON format.
max_calls	query[integer]	Maximum number of calls to return about the event. Default: 10.

Success Response

- **Code:** 200

  Content: JSON representation of NMS events

Error Response

- **Code:** 204 No Content

  Event with the given indexes were not found.
- **Code:** 401 Unauthorized

  User is not authorized to perform the request.
- **Code:** 500 Internal Server Error

  Unspecified error has occurred.

PUT /trbl-rest/events/{id}/trouble-queue

Updates trouble queue(s) for an event.

Parameters

Name	Type	Description
id required	path[integer]	Event index.
unnamed required	data	Array of trouble queue codes.
comment optional	query[string]	Comment
source optional	query[string]	Update source. Written into the field in the JOBS table specified by the "workQueueSourceField" configuration rule.
as-user optional	query[string]	User to do the API call as. The calling user must have the 'Allow as-user Parameter' mobile permission.

Payload Example

```
["SRV", "LNE", "EVL"]
```

Success Response

- **Code:** 204 No Content

  Error Response

- **Code:** 401 Unauthorized

  User is not authorized to perform the request.

- **Code:** 500 Internal Server Error

  Unspecified error has occurred.

POST /trbl-rest/events/{id}

Updates information for an event. The following event fields can be updated: case notes, ERT, Event Details picklists. Event can also be restored and completed.

Parameters

Name	Type	Description
id required	path[integer]	Event index.
unnamed required	data	Event information in JSON format.
as-user optional	query[string]	User to do the API call as. The calling user must have "Allow as-user Parameter" mobile permission.

Success Response

- **Code:** 204 No Content

Error Response

- **Code:** 400 Bad Request

  Event index mismatch between resource URL and body.
- **Code:** 401 Unauthorized

  User is not authorized to perform the request.
- **Code:** 500 Internal Server Error

  Unspecified error has occurred.

GET /trbl-rest/config/{cfg}

Retrieves NMS Trouble Management configuration items.

Parameters

Name	Type	Description
cfg optional	path[string]	Configuration type. One of the following: • **picklist:** event completion choices, from the PICKLIST_GUI table. • **trouble-queue:** trouble queue options, from the RAPID_REFERRAL table. • **crew-members:** crew member type options, from the CREW_MEMBER_CLASSES table. • **te-state-actions:** All act_key, act_name from the TE_STATE_ACTIONS configuration table. This can be used to determine which state transitions are valid for a given event.

Success Response

- **Code:** 200

  Content: JSON representation of the requested configuration item.

Error Response

- **Code:** 204 No Content
- **Code:** 401 Unauthorized

  User is not authorized to perform the request.
- **Code:** 500 Internal Server Error

  Unspecified error has occurred.

GET /mobile/version

Get

Parameters

None.

Success Response

- **Code:** 200
  Content: Version information for the NMS Application Server and the NMS Mobile Server including items like build date, build tag, project name, NMS version, and server host name.

Error Response

- **Code:** 401 Unauthorized
  User is not authorized to perform the request
- **Code:** 500 Internal Server Error
  Unspecified error has occurred

GET /mobile/application-version/{name}/{arch}

Returns the latest version number of the application for the given Application Name and Architecture.

Parameters

Name	Type	Description
name	path[string]	Name of the application (OMA).
arch	path[string]	Architecture of the application. Can be one of these values: ANDROID, IOS, WIN10, BROWSER

Response

- **Code:** 200 The return data will be the latest application version number. If there is no version available matching the app Name and App Architecture, a -1 is returned.

GET /mobile/application-versions/{name}/{arch}

Returns a list of available version numbers of the application for the given Application Name and Architecture.

Parameters

Name	Type	Description
name	path[string]	Name of the application (OMA).
arch	path[string]	Architecture of the application. Can be one of these values: ANDROID, IOS, WIN10, BROWSER

Response

- **Code:** 200 The return data will be a list of integers for the version numbers of the application that are available. If there is no version available matching the app Name and App Architecture, an empty list is returned.

GET /mobile/application/{name}/{arch}

Returns the latest version of the application for the given Application Name and Architecture in .zip format.

Parameters

Name	Type	Description
name	path[string]	Name of the application (OMA).
arch	path[string]	Architecture of the application. Can be one of these values: ANDROID, IOS, WIN10, BROWSER.

Response

- **Code:** 200 The return data will be the application in .zip format. If there is no version available matching the app Name and App Architecture, an exception is returned.

GET /mobile/application/{name}/{arch}/{version}

Returns the application for the given Application Name, Application version and Architecture in .zip format.

Parameters

Name	Type	Description
name	path[string]	Name of the application (OMA).
arch	path[string]	Architecture of the application. Can be one of these values: ANDROID, IOS, WIN10, BROWSER.
version	path[integer]	Version of the application.

Response

- **Code:** 200 The return data will be the application in .zip format. If there is no application matching the app Name, app Version and App Architecture, an exception is returned.

POST /mobile/mobile-user-logout

Notifies NMS that mobile user has logged out.

Parameters

None.

Success Response

- **Code:** 204 No Content

  Content: None

Error Response

- **Code:** 401 Unauthorized

  User is not authorized to perform the request.
- **Code:** 500 Internal Server Error

  Unspecified error has occurred.

PUT /mobile/user-profile/{field-name}/{value}

Updates the requesting users profile for the given field-name with the given value.

Parameters

Name	Type	Description
field-name required	path[string]	Profile field to update. Names include: • First name • Last name • Email • Phone • Company
value required	path[string]	Value to set field to.
as-user optional	query[string]	User to do the API call as. The calling user must have "Allow as-user Parameter" mobile permission.

Success Response

- **Code:** 200
  Content: User information including all profile value

Error Response

- **Code:** 401 Unauthorized
  User is not authorized to perform the request
- **Code:** 500 Internal Server Error
  Unspecified error has occurred

GET /mobile/device/{id}/info

Returns information about a given device given a device handle.

Parameters

Name	Type	Description
id required	path[string]	The device handle in the format: class.index

Success Response

- **Code:** 200
  Content: Returns information about the device including alias, phases, closed phases, fully open flag, fully closed flag.

Error Response

- **Code:** 401 Unauthorized
  User is not authorized to perform the request
- **Code:** 500 Internal Server Error
  Unspecified error has occurred

GET /mobile/device/{id}/operate/{operation}/phases/{phases}/time/{time}

Performs the operation on the given phases for a device.

Parameters

Name	Type	Description
id required	path[string]	The device handle in the format: class.index
operation required	path[string]	Operation to perform on the device, either open or close
phases required	path[integer]	Integer representation of the phases to operate. For example, 1=A, 2=B, 3=AB, 4=C, 5=AC, 6=BC, 7=ABC.
time required	path[long]	Time the operation was requested. 0 = current time.
as-user optional	query[string]	User to do the API call as. The calling user must have "Allow as-user Parameter" mobile permission.
crew-id optional	query[integer]	The crew key, if any resulting newly created Real Outage should be assigned to the crew.
nested optional	query[string] (Y|N)	Whether to create a nested outage (when applicable)
onsite optional	query[string] (Y|N)	Whether the passed crew should also be set to Onsite for the resulting event.

Success Response

- **Code:** 200
  Content: Operation successful

Error Response

- **Code:** 401 Unauthorized
  User is not authorized to perform the request
- **Code:** 500 Internal Server Error
  Unspecified error has occurred

GET /mobile/device/{id}/lookahead/{operation}/{phases}

Returns look ahead data about the requested operation on the given device.

Parameters

Name	Type	Description
id required	path[string]	The device handle in the format: class.index
operation required	path[string]	Operation to perform on the device, either open or close
phases required	path[integer]	Integer representation of the phases to operate. For example, 1=A, 2=B, 3=AB, 4=C, 5=AC, 6=BC, 7=ABC.

Success Response

- **Code:** 200
  Content: Returns Look Ahead Information including device information, alias, phases, customers affected by phase, ato customers affected by phase, condition, abnormal devices, critical customers, and DERs.

Error Response

- **Code:** 401 Unauthorized
  User is not authorized to perform the request
- **Code:** 500 Internal Server Error
  Unspecified error has occurred

POST /mobile/device/statuses

Take a list of object handles and return status of the objects.

Parameters

Name	Type	Description
return-unknown-devices	query[Y or N]	Flag to indicate if devices that statuses were requested for that do not exist in the DDService, if set to Y, will be returned as objects with statuses set to -1, otherwise the unknown objects will not have any returned statuses.
handles	data	List of object handles to return statuses for. For example: `[{"deviceClass":126,"deviceIndex":1600},{"deviceClass":126,"deviceIndex":1601}]`

Response

- 200: with JSON formatted return.

  For example:

```
[{"deviceClass":126,"deviceIndex":1601,"nominalStatus":4,"currentStatus":4,"phases":0},{"deviceClass":126,"deviceIndex":1600,"nominalStatus":2,"currentStatus":0,"phases":0}]
```

The phase value is not supported yet will be returned as zero.

GET /mobile/{id}/customers

Get a list of customers associated with a device id, including downstream devices. The call will take a device handle and a maximum number of SND's to get customers for.

Parameters

Name	Type	Description
id	path[handle string]	Handle of the device to get customers for (*e.g.*, 123.1001).
max-supply-nodes	query[integer]	Maximum number of SND's to get customers for.

Response

- **Code:** 200 The return value will be the list of customers in JSON double array format, where the first record of the array will be the field names, and the rest of the array will be records of just values. It is up to the client to reformat the return value into true JSON objects.

GET /mobile/maps/{mapname}

Returns the requested map in GeoJSON format.

Parameters

Name	Type	Description
mapname required	path[string]	Name of the map to retrieve.
compression optional, defaults to 'Y'	query[string]	Indicates if the returned map is to be compressed or not by given value, Y or N.

Success Response

- **Code:** 200
  Content: GeoJSON map.

Error Response

- **Code:** 401 Unauthorized
  User is not authorized to perform the request
- **Code:** 500 Internal Server Error
  Unspecified error has occurred

GET /mobile/file/:dir_name /:file_name

Returns the requested file from the given OPERATION_MODEL subdirectory in JSON format.

Parameters

Name	Type	Description
dir-name	path[string]	Name of the OPERATIONS_MODEL subdirector
file-name	path[string]	Name of the file to retrieve

Success Response

- **Code:** 200
- **Content:** JSON file format

Error Response

- **Code:** 401 Unauthorized
  User is not authorized to perform the request
- **Code:** 500 Internal Server Error
  Unspecified error has occurred

POST /mobile/crew

Update crew information. This is a stub API and not yet implemented.

Parameters

Name	Type	Description
crew	data	Mobile Crew Information
as-user optional	query[string]	User to do the API call as. The calling user must have "Allow as-user Parameter" mobile permission.

Success Response

- **Code:** 200
  Content: updated Mobile Crew information

Error Response

- **Code:** 401 Unauthorized
  User is not authorized to perform the request
- **Code:** 500 Internal Server Errors
  Unspecified error has occurred

GET /mobile/condition/{class}/{id}

Return condition details given the condition class and id.

Parameters

Name	Type	Description
class required	path[string]	Condition class name
id required	path[integer]	Condition index
as-user optional	query[string]	User to do the API call as. The calling user must have "Allow as-user Parameter" mobile permission.

Success Response

- **Code:** 200
  Content: Condition details including handle, affected device handle, node, who created, class name, partition, when created, condition status, phases, ncg, x/y coordinates, application string, text, condition specific data, and external id.

Error Response

- **Code:** 401 Unauthorized
  User is not authorized to perform the request
- **Code:** 500 Internal Server Error
  Unspecified error has occurred

PUT /mobile/condition/{class}/{id}/text/{text}

Updates the text value of a given condition.

Parameters

Name	Type	Description
class required	path[string]	Condition class name
id required	path[integer]	Condition index
text required	path[string]	Text value to update to condition
as-user optional	query[string]	User to do the API call as. The calling user must have "Allow as-user Parameter" mobile permission.

Success Response

- **Code:** 200
  Content: None.

Error Response

- **Code:** 401 Unauthorized
  User is not authorized to perform the request
- **Code:** 500 Internal Server Error
  Unspecified error has occurred

DELETE /mobile/condition/{class}/{id}

Deletes the given condition.

Parameters

Name	Type	Description
class required	path[string]	Condition class name
id required	path[integer]	Condition index
as-user optional	query[string]	User to do the API call as. The calling user must have "Allow as-user Parameter" mobile permission.

Success Response

- **Code:** 200
  Content: None.

Error Response

- **Code:** 401 Unauthorized
  User is not authorized to perform the request
- **Code:** 500 Internal Server Error
  Unspecified error has occurred

GET /mobile/switch-sheets/assignments/{crew-key}

Returns a list of Mobile Switch Sheets associated to the given crew key

Parameters

Name	Type	Description
crew-key required	path[integer]	Crew Key

Success Response

- **Code:** 200
  Content: A list of Mobile Switch Sheets, each sheet contains a sheet id, list of attribute/values, a list of steps, and a list of switch sheet associated document names and descriptions.

Error Response

- **Code:** 401 Unauthorized
  User is not authorized to perform the request
- **Code:** 500 Internal Server Error
  Unspecified error has occurred

POST /mobile/switch-sheets/{sheet-class}/{sheet-index}/steps/{step-class}/{step-index}

Updates status and fields of a switch sheet step.

Parameters

Name	Type	Description
sheet-class required	path[integer]	Sheet class number
sheet-index required	path[integer]	Sheet index number
step-class required	path[integer]	Step class number
step-index required	path[integer]	Step index number
action optional	query[string]	Step transition action: complete_step, abort_step, fail_step
update-fields optional	query[string]	Step fields that have changes: comments, switching_desc, step_details, executed_time.
time	query[long]	Time when the switch step update occurred.
as-user optional	query[string]	User to do the API call as. The calling user must have "Allow as-user Parameter" mobile permission.

Success Response

- **Code:** 200
  Content: None.

Error Response

- **Code:** 401 Unauthorized
  User is not authorized to perform the request
- **Code:** 500 Internal Server Error
  Unspecified error has occurred

POST /mobile/switch-sheets/{sheet-class}/{sheet-index}/steps/{step-class}/{step-index}/details

Updates comments, switching description, step details, mobile status, or mobile status date of a switch sheet step.

Parameters

Name	Type	Description
sheet-class required	path[integer]	Sheet class number
sheet-index required	path[integer]	Sheet index number
step-class required	path[integer]	Step class number
step-index required	path[integer]	Step index number
update-fields optional	query[string]	Step fields that have changes, space separated: COMMENTS, SWITCHING_DESC, STEP_DETAILS, MOBILE_STATUS, MOBILE_STATUS_TIME.
as-user optional	query[string]	User to do the API call as. The calling user must have "Allow as-user Parameter" mobile permission.
switch-step required	data	Switch step object that changes are applied to.

Success Response

- **Code:** 200

  Content: None.

Error Response

- **Code:** 401 Unauthorized

  User is not authorized to perform the request
- **Code:** 500 Internal Server Error

  Unspecified error has occurred

POST /mobile/switch-sheets/{sheet-class}/{sheet-index}/transition

Transition the given switch sheet using the transition action name provided. Update sheet log with comment, user, and time as provided.

Parameters

Name	Type	Description
sheet-class	path[integer]	Sheet class number
sheet-index	path[integer]	Sheet index number
action	query[string]	Transition action to perform
comment	query[string]	Comment to add to the sheet log
time	query[long]	Time when the transition happened
as-user	query[string]	User to do the API call as. The calling user must have "Allow as-user Parameter" mobile permission

Success Response

- **Code:** 200
  Content: None.

Error Response

- **Code:** 401 Unauthorized
  User is not authorized to perform the request
- **Code:** 500 Internal Server Error
  Unspecified error has occurred

POST /mobile/switch-sheets/{sheet-class}/{sheet-index}/steps/{step-class}/{step-index}/location

Update location (address) of a step of a switching plan.

Parameters

Name	Type	Description
sheet-class required	path[integer]	Sheet class number
sheet-index required	path[integer]	Sheet index number
step-class required	path[integer]	Step class number
step-index required	path[integer]	Step index number
unnamed required	data	New location (Address) of the step.
as-user optional	query[string]	User to do the API call as. The calling user must have "Allow as-user Parameter" mobile permission.

Success Response

- **Code:** 200
  Content: number indicating a count of the number of step that had this device location updated.

Error Response

- **Code:** 401 Unauthorized
  User is not authorized to perform the request
- **Code:** 500 Internal Server Error
  Unspecified error has occurred

GET /mobile/switch-sheets/{sheet-class}/{sheet-index}/report

Get a formatted report for the given switching sheet.

Parameters

Name	Type	Description
sheet-class required	path[integer]	Sheet class number
sheet-index required	path[integer]	Sheet index number
format	query[string]	Format of the report: pdf (default) html
options	query[string]	Content of the report, use the following content values fallowed by true or false for inclusion in the report, default value is true for all: SHOW_EC:true; SHOW_AL:true; EXTERNAL_DOCUMENTS:true; SHOW_SAFETY:true; SHOW_REQUEST:true; SHOW_IC:true; SHOW_STEPS:true

Success Response

- **Code:** 200
  Content: content of report

Error Response

- **Code:** 401 Unauthorized
  User is not authorized to perform the request
- **Code:** 500 Internal Server Error
  Unspecified error has occurred

GET /mobile/switch-sheets/{sheet-class}/{sheet-index}/document/{document-id}

Get an attached document from a switching sheet given the document ID.

Parameters

Name	Type	Description
sheet-class required	path[integer]	Sheet class number
sheet-index required	path[integer]	Sheet index number
document-id required	path[integer]	Document ID

Success Response

- **Code:** 200
  Content: document requested

Error Response

- **Code:** 401 Unauthorized
  User is not authorized to perform the request
- **Code:** 500 Internal Server Error
  Unspecified error has occurred

PUT /mobile/switch-sheets/{sheet-class}/{sheet-index}/document

Add a document to a switching sheet

Parameters

Name	Type	Description
sheet-class required	path[integer]	Sheet index number
sheet-index required	path[integer]	Sheet index number
unnamed required	data	Document to add
as-user optional	query[string]	User to do the API call as. The calling user must have "Allow as-user Parameter" mobile permission.

Success Response

- **Code:** 200
  Content: Attachment Document details

Error Response

- **Code:** 401 Unauthorized
  User is not authorized to perform the request
- **Code:** 500 Internal Server Error
  Unspecified error has occurred

POST /mobile/hlm

Sends high-level message (HLM) to NMS.

Parameters

Name	Type	Description
target required	query[string]	NMS user this HLM should be delivered to
msg required	data	JSON representation of the HLM

HLM JSON Format

Attribute	Type	Description
from	string	Message sender
to	string	NMS tool this HLM should be delivered to
message	string	The message text

Example

```
POST https://nms.example.com:7102/nms-ws/mobile/hlm?target=nms2

{
  "from": "nms1",
  "message": "test",
  "to": "CallEntry"
}
```

Required Permissions

Send HLM

Success Response

- **Code:** 204 No Content
- **Content:** None

Error Response

- **Code:** 400 Bad Request

  Either 'target' or 'msg' parameter is empty.
- **Code:** 401 Unauthorized

User is not authorized to perform the request.

- **Code:** 500 Internal Server Error

  Unspecified error has occurred.

GET /mobile/lookup-types/{table}/{keyField}/{valueField}

Get a set of look up values from a table with specified integer key field and string value field.

The table must be in the read_only_tables, inserted from the [project]_readonly.sql file. The table must also be in the mobile_lookup_types_tables table, inserted generally from the [project]_mobile_crew.sql file.

Parameters

HLM JSON Format

Example

```
GET https://nms.example.com:7102/nms-ws/mobile/lookup-types/
crew_mobile_carriers/type_num/carrier
```

Returns, in JSON format:

```
[
 {"id":0,"value":" "},
 {"id":1,"value":"ATT"},
 {"id":2,"value":"Verizon"},
 {"id":3,"value":"T-Mobile"},
 {"id":4,"value":"Sprint"},
 {"id":5,"value":"US Cellular"},
 {"id":10,"value":"Other"}
]
```

Required Permissions

None

Success Response

- **Code:** 200 Ok
- **Content:** JSON lookup types with "id" and "value" pairs.

Error Response

- **Code:** 401 Unauthorized

  User is not authorized to perform the request.

- **Code:** 500 Internal Server Error

  Unspecified error has occurred.

GET /mobile/nms-status

Returns status of the NMS system. Plain text string 'up' is returned if NMS is accessible and all critical services are operational. Otherwise returns plan text string 'down'.

Parameters

None.

Success Response

Code: 200

Content: None.

Error Response

- **Code:** 401 Unauthorized

  User is not authorized to perform the request
- **Code:** 500 Internal Server Error

  Unspecified error has occurred

PUT /trbl-rest/event/{id}/confirm-outage

Will confirm open the device associated with a probable outage Event.

Parameters

Name	Type	Description
id required	path[integer]	Event Idx
as-user optional	query[string]	User to do the API call as. The calling user must have "Allow as-user Parameter" mobile permission.

Success Response

- **Code:** 200
  Content: None.

Error Response

- **Code:** 401 Unauthorized
  User is not authorized to perform the request
- **Code:** 500 Internal Server Error
  Unspecified error has occurred

POST /trbl-rest/event/{id}/log

Add an Event Log entry to the given event.

Parameters

Name	Type	Description
id required	path[integer]	Event ID
logEntry required	data[string]	Log message
as-user optional	query[string]	User to do the API call as. The calling user must have "Allow as-user Parameter" mobile permission.

Success Response

- **Code:** 200
  Content: None

Error Response

- **Code:** 401 Unauthorized
  User is not authorized to perform the request
- **Code:** 500 Internal Server Error
  Unspecified error has occurred

POST /trbl-rest/event/{id}/log-once

Add an Event Log entry to the given event; verify it has not already been added before.

Parameters

Name	Type	Description
id required	path[integer]	Event ID
logEntry required	data[string]	Log message
as-user optional	query[string]	User to do the API call as. The calling user must have "Allow as-user Parameter" mobile permission.

Success Response

- **Code:** 200
  Content: None.

Error Response

- **Code:** 401 Unauthorized
  User is not authorized to perform the request
- **Code:** 500 Internal Server Error
  Unspecified error has occurred

PUT /trbl-rest/event/{id}/release-all

Release all crews from the event

Parameters

Name	Type	Description
id required	path[integer]	Event ID

Success Response

- **Code:** 200
- **Content:** None.

Error Response

- **Code:** 401 Unauthorized

  User is not authorized to perform the request
- **Code:** 500 Internal Server Error

  Unspecified error has occurred

POST /trbl-rest/event/{id}/state-transition

Request a state transition for the passed event.

Parameters

Name	Type	Description
id required	path[integer]	Event ID
action required	data[string]	The TE state action to be used to transition the event.
as-user optional	query[string]	User to do the API call as. The calling user must have "Allow as-user Parameter" mobile permission.

Success Response

- **Code:** 200

  Content: None.

Error Response

- **Code:** 401 Unauthorized
  User is not authorized to perform the request
- **Code:** 500 Internal Server Error
  Unspecified error has occurred

GET /trbl-rest/events/{id}/customers

Get the customer information for the passed event index. This includes all custom fields from the CES_CUSTOMERS table.

Parameters

Name	Type	Description
id required	path[integer]	Event ID

Success Response

- **Code:** 200
  Content: double array of customer information.

Error Response

- **Code:** 401 Unauthorized
  User is not authorized to perform the request
- **Code:** 500 Internal Server Error
  Unspecified error has occurred

POST /trbl-rest/user-log

Add an User Log entry to the given event.

Parameters

Name	Type	Description
logEntry required	data[string]	Log message

Success Response

- **Code:** 200
  Content: None.

Error Response

- **Code:** 401 Unauthorized
  User is not authorized to perform the request
- **Code:** 500 Internal Server Error
  Unspecified error has occurred

POST /trbl-rest/user-log-once

Add an User Log entry to the given event; verify it has not already been added before.

Parameters

Name	Type	Description
logEntry required	data[string]	Log message

Success Response

- **Code:** 200
  Content: None.

Error Response

- **Code:** 401 Unauthorized
  User is not authorized to perform the request
- **Code:** 500 Internal Server Error
  Unspecified error has occurred

POST /trbl-rest/events/{id}/associate

Associates fuzzy event to a device.

Parameters

Name	Type	Description
id required	path[integer]	Event index
unnamed required	data[json]	Device handle
as-user optional	query[string]	The user to do the API call as. The calling user must have the 'Allow as-user Parameter' mobile permission.

Payload Example

```
{
  "app": 0,
  "classNumber": 206,
  "instanceNumber": 2149
}
```

Success Response

- **Code:** 204
  Content: No Content

Error Response

- **Code:** 401 Unauthorized
  User is not authorized to perform the request
- **Code:** 500 Internal Server Error
  Unspecified error has occurred

Chapter 15

Weather Data Adapter

This chapter includes the following topics:

- Adapter Overview
- Data Import Formats
- Running the Adapter
- Related Runtime and Configuration Tables

Adapter Overview

The Weather Data adapter is responsible for pulling real-time and future forecast weather data for use by the DMS power flow analysis. This adapter is written in Python and needs Python3 to run. It only imports the data with a timestamp in the future. Any data with a timestamp prior to the current time is ignored by the adapter. The weather data is used within the DMS applications for two purposes.

1. To drive the load forecast used by the power flow analysis. The weather data will be used to set which load profile is used by the real-time and forecast power flow solutions.
2. The weather data will be archived in the NMS PF_DERMS_FORECAST_HISTORY database table such that it can be used by the Profile Adapter to determine a historical weather conditions for a particular weather zone. The Profile Adapter needs the historical data such that provided load profiles can be adjusted properly by the adapter depending on the recorded temperature.

Data Import Formats

The Weather Data Adapter can import the weather data to either an NMS database or to a non-NMS database from any of the following sources:

1. Flat CSV Files
2. External Database Table
3. NOAA Weather Service

Flat CSV Files

The adapter can import the data either from a single large CSV file or multiple smaller CSV files. However, they need to have a consistent format. Which means that they all should either have a header row or no header row and they all should have the columns in the same sequence. Projects should make sure that data is given in the same units as in the load profiles. The Adapter does not perform any unit conversions. However, while importing data to a NMS database, adapter can convert the data into profile keys if configured. For example, cloud coverage can be given as a string, 'Cloudy', 'Clear', 'Partially Cloudy' etc. or it can also be given as a solar potential index which varies between 0 and 1, or it can also be given in percentile. Power Flow can only process the indexes. If the data is given as a string or percentile, then adapter converts them to a profile key. In this case, project will have to set the rule_value_integer_4 to 1 in the corresponding 'distGenDefault' SRS-rule, and also have to provide the mapping between the values and the profile keys in the 'pf_weather_data_profile_map' table. If the data value is numerical then it will be mapped to the upper limit of that band. This kind of data conversion is not possible if importing data to a non-NMS database.

Input File Format

CSV files should have following four columns in any order:

- **Zone:** Name of the zone.
- **Time:** Date and time, in mm/dd/yyyy HH24:MI:SS format.
- **Power Source:** An integer representing temperature (-1), solar, and wind power source. This value should be consistent with the rule_value_integer_1 value of 'distGenDefault' SRS-rules.
- **Value:** Forecasted value.

Configuration

The adapter parameters are configured in the pf_weather_data_config database table, which should be present in the host database. The configuration table should have a row with parameter_name as 'source' and parameter_value_1 as 'CSV'. This configuration parameter tells the adapter the source of the weather data. The rest of the parameters are as follows:

- **input_address:** Environmental variable OPERATIONS_MODELS should be configured. This variable is set to the path to the directory that hosts the 'weather_data' directory. All input CSV files should be stored in 'weather_data' directory. The adapter creates two more directories in the weather_data directory. The first is 'log' which host the log files, and the second is 'parsed_csvs' which host all the csv files which have been processed by the adapter.
- **headerPresent:** This parameter should be set to 'yes' if CSV files have a header row present; otherwise, it should be set to 'no'.
- **zone_column:** It should be an integer specifying the column number of CSV file which contains the zone names. Column numbers start from 0 in CSVs

- **datetime_column:** It should be an integer specifying the column number of CSV file which contains the date and time.
- **power_source_column:** It should be an integer specifying the column number of CSV file which contains power_source number
- **value_column:** It should be an integer specifying the column number of CSV file which contains the value for the corresponding power_source.

External Database Table

The adapter can import the data from an external database table. The connection with the external database should only be made through an Oracle Wallet. Oracle Wallet should contain the connection string and password for the external database. The connection string consists of the database server name, port number and database service name. If the data is imported in an NMS database, the data conversion for solar and wind should be performed. The adapter does not perform data unit conversions while importing from a database table.

Input Table Schema

Similar to CSV format, the source database table should have the following fields:

- **Zone:** Name of the zone. The data type for this column should be VARCHAR2.
- **Time:** Date and time. The data type for this column should be VARCHAR2 and time should be given in 'YYYY-MM-DD 24hh:mm:ss' format.
- **Power Source:** an integer representing temperature (-1), solar, and wind power source. This value should be consistent with the rule_value_integer_1 value of 'distGenDefault' SRS-rules.
- The data type for this column should be NUMBER.
- **Value:** forecasted value. The data type for this column should be VARCHAR2.

Configuration

The adapter parameters are configured in the pf_weather_data_config database table (except sourceDBServer parameter, which is configured in CES_PARAMETERS table), which should be present in the host database. The configuration table should have a row with parameter_name as 'source' and parameter_value_1 as 'DB'. This configuration parameter tells the adapter the source of the weather data. The rest of the parameters are as follows:

- **sourceDBServer:** This parameter needs three values:
  - **parameter_value_1:** Name of the server machine.
  - **parameter_value_2:** Port number on which database service is running.
  - **parameter_value_3:** Database service name.
- **sourceDBTableName:** The name of the source database table.
- **zone_column:** The name of the database table field that contains the zone names.
- **datetime_column:** The name of the database table field that contains the date and time.
- **power_source_column:** name of the database table field which contains power_source number.
- **value_column:** name of the database table field which contains the value for the corresponding power_source.

NOAA Weather Service

The adapter is capable of capturing 1 hour, 24 hour, and 7 days of hourly data from NOAA. The adapter pulls the temperature, wind speed and cloud coverage data from the Internet. NOAA provides the data in 3 hour intervals. This adapter automatically interpolates the data according to the FLM granularity provided by SRS rule 'FLM Custom Forecasting' in rule_value_integer_1.

Since the adapter is pulling data from the NOAA weather feeder, this adapter is only applicable to US customers. The adapter works by reading the configured weather zones in the local PF_WEATHER_ZONE database table. The associated latitude and longitude is then used to gather the associated weather data. Therefore, the host database must have this table for the adapter to work. The adapter parses the data and places it in the PF_WEATHER_ZONE_FORECAST database table.

Configuration

The adapter parameters are configured in the pf_weather_data_config database table, which should be present in the host database. The configuration table should have a row with parameter_name as 'source' and parameter_value_1 as 'NOAA'.

To utilize the adapter the following configuration items will need to be completed.

1. **proxy:** If a proxy is needed to get out of the internal network, the following rule will need to be configured with proxy details in local database table PF_WEATHER_DATA_CONFIG. If no proxy exists this rule does not need to be configured.

   Example

   ```
   INSERT INTO pf_weather_data_config (parameter_name,
   parameter_value_1, parameter_value_2, parameter_value_3)
      VALUES ('proxy', 'http', 'www-proxy.us.oracle.com', '80');
   ```

2. **solar_power_source_id:** It should be consistent with the corresponding 'distGenDefault' SRS-rule'.
3. **wind_power_source_id:** It should also be consistent with the corresponding 'distGenDefault' SRS-rule'.
4. **temperature_unit:** F or C. By default, NOAA gives temperature data in Fahrenheit. However, the adapter can convert the temperatures to Celsius if configured. This unit should be consistent with the unit used in the load profiles.
5. **wind_speed_unit:** By default, NOAA gives the wind speed in knots. However, adapter converts it to miles per hour (mph) or kilometer per hour (kph) as configured. This unit should be consistent with the unit used in the load profiles.
6. **noaa_conn_reattempts:** Sometimes the adapter fails to connect with NOAA or NOAA returns inconsistent data. In these cases, this option can be configured to automatically make multiple attempts to connect with the NOAA service. The maximum number of reattempts and the delay between connection attempts are configured using parameter value 1 and parameter value 2, respectively.

Load Frequency

Customers wishing to use the NMS weather adapter to pull NOAA weather service data need to configure the adapter to be invoked on a cron job. Setting up a cron job allows customers to decide the frequency and amount of data to pull at any given time. The adapter can be called for the following forecast modes.

1. Weekly - The adapter will obtain 7 days worth of weather forecast data
2. Hourly - The adapter will obtain weather data for the next 24 hours
3. Current - The adapter will obtain the current weather data if it is run without either the -hourly or -weekly options.

For example, a customer may want to update the weekly forecast daily, the hourly forecast twice a day, and gather the current weather data each hour. Another example would be to run the weekly forecast daily and just run the hourly forecast once in the morning.

Running the Adapter

The weather data adapter can be run with the following command line options:

```
nms-weatherDataAdapter [-v] [-debug] [-hourly] [-weekly] [-exdb]
```

Option	Description
-v	Turn on verbose output.
-debug	Turn on debug to assist with adapter issues. If debug is turned on, it will turn on verbose output.
-hourly	to pull hourly data from NOAA
-weekly	to pull weekly data from NOAA
-exdb	must run with this option if importing data to a non-NMS database

Sometimes the adapter fails to connect with NOAA or NOAA returns inconsistent data. In these cases, the **noaa_conn_reattempts** option can be configured to automatically make multiple attempts to connect with the NOAA service. For details, see the preceding configuration section.

Related Runtime and Configuration Tables

The following runtime and configuration tables are related to the weather adapter.

- **PF_WEATHER_ZONE**: Configures the weather zones for use by the DMS analysis. The latitude and longitude can be specified for each zone within this table.
- **PF_WEATHER_ZONE_FORECAST**: Stores the weather zone forecast. The temperature forecast is placed within this table by the adapter.
- **PF_DERMS_FORECAST_HISTORY**: Stores the weather zone history. The temperature data is archived in this table for use by the NMS Profile Adapter.
- **CES_PARAMETERS:** Stores the configuration parameters proxy.https and sourceDBServer where app=WeatherAdapter.
- **PF_WEATHER_DATA_PROFILE_MAP**: Stores the mapping between the weather data and profile keys for the specified power sources.

Chapter 16

DERMS Adapter

This chapter includes the following topics:

- Overview
- Configuration
- Running the Adapter
- Database Tables
- Log Files

Overview

The Oracle Utilities NMS Distribution Management System uses DERMS forecast updates of various fuel source types (such as wind, solar/photovoltaic, diesel, *etc.)* for power flow analysis. The forecast updates are loaded into the NMS PF_DER_FORECAST, PF_DER_DEMAND_RESPONSE_FORECAST, and PF_WEATHER_ZONE_FORECAST database tables. These tables may be populated by any mechanism suitable for the project's business processes and data sources. An NMS script, `nms-DERMSAdapter`, can be used to load the tables with data from a CSV file or an RDBMS table.

Configuration

The script expects the CSV file at the path $OPERATIONS_MODELS/derms_forecasts. The processed CSV files are moved to $OPERATIONS_MODELS/derms_forecasts/parsed_CSVs sub directory and the errors are logged at $OPERATIONS_MODELS/derms_forecasts/log directory. The CSV file format is specified in the PF_DERMS_ADAPTER_CONFIG database table. This includes configuring information like number of columns, column positions and whether header present or not.

If the input is an RDBMS table, then the forecast updates are expected in a database table. If the adapter is running on enterprise service network, then the forecast updates are expected in the DERMS_FORECAST_UPDATES table. If the adapter is running on operational service network, then the forecast updates are expected in the PF_DERMS_FORECAST_UPDATES table.

PF_DERMS_ADAPTER_CONFIG

Name	Data Type	Description
parameter_name	VARCHAR2(32)	The name of the parameter. Required.
parameter_value_1	VARCHAR2(64)	Required parameter value.
parameter_value_2	VARCHAR2(64)	Optional parameter value.
parameter_value_3	VARCHAR2(64)	Optional parameter value.

The following parameters are configured in the in the table PF_DERMS_ADAPTER_CONFIG:

Parameter	Description
sourceDBServiceName	Sets the database service name, server name, and port details for the forecast updates table. • **parameter_value_1:** server name. The default value is DB. • **parameter_value_2:** port number. • **parameter_value_3:** database service name.

operationalService	Sets whether the adapter is running on the operational service network or the enterprise service network.
	• **parameter_value_1:** Yes | No
	  • Yes: operational service network
	  • No: the enterprise service network

useSqlLoader	Sets whether to use SQL Loader or NMS Import to load the data into NMS tables.
	• **parameter_value_1:** Yes | No
	  • Yes: SQL Loader
	  • No: NMS Import or other process

forecastDir	The directory containing the forecast CSV file.
numDataCol	Define rule to specify the number of columns in raw CSV

dermsColumnMap	Defines the CSV columns.
	• **parameter_value_1:** column name.
	• **parameter_value_2:** column number. The column numbering starts with 0, which is the first column in the table. The standard configuration is defined as follows:
	  • Column 0 = ForecastDate (mm/dd/yyyy HH24:MI:SS)
	  • Column 1 = ResourceName
	  • Column 2 = PowerSourceType
	  • Column 3 = ForecastValue

Parameter	Description
headerPresent	Sets whether the CSV file has a header row or not. • **parameter_value_1:** Yes | No

Running the Adapter

The script can be run with following command line options:

```
nms-DERMSAdapter [-db] [-v] [-debug][-help]
```

Option	Description
-db	Input is RDBMS table. Otherwise, the input is a CSV file.
-v	Turn on verbose output.
-debug	Turn on debug for assisting with issues in the adapter. If debug is turned on, it will turn on verbose.
-help	Print help.

The following assumptions apply:

1. Location of the Forecast Data
   - File Based Input: The input CSV files are stored in the $OPERATIONS_MODELS/derms_forecasts directory.
   - RDBMS Table Based Input: DERMS forecast updates are available in the following table:
     - On operational service bus:

       pf_derms_forecast_updates (FORECAST_DATE, RESOURCE_NAME, POWER_SOURCE_TYPE, FORECAST_VALUE)
     - On enterprise service bus:

       derms_forecast_updates (FORECAST_DATE, RESOURCE_NAME, POWER_SOURCE_TYPE, FORECAST_VALUE)
2. Processing the Forecast Data
   - File Based Input: Once the CSV files have been processed, they are moved to the $OPERATIONS_MODELS/derms_forecasts/parsed_csvs directory.
   - RDBMS Table Based Input: The processed rows will be deleted from the input database table.

3. Once the data is validated, DER forecast data is written to the following table:
   - On operational service:

     Based on the forecast type (rule_value_2) defined by the SRS rules distGenDefault:
     - 0 = Weather Affected Fuel Type; write to pf_weather_zone_forecast
     - 1 = Single DER Forecast type; write to table pf_der_forecast

- 2 = Demand Response type; write to table pf_demand_reponse_forecast

  Staging mechanism is used to load data from input RDBMS table to the run time forecast tables.

- On enterprise service bus:

  pf_derms_forecast_updates (FORECAST_DATE, RESOURCE_NAME, POWER_SOURCE_TYPE, FORECAST_VALUE)

4. For duplicate items within a single input file or in the RDBMS table, the first item read will be used. In some instances, these duplicates may be flagged as errors and placed into the error log file.

The OPAL configuration can be examined for examples of how this script is used. In OPAL, the script is called from a parent script (LoadOPALDermsForecasts), which is called from the OPAL-postbuild script.

Database Tables

- **DERMS_FORECAST_UPDATES:** Input RDBMS table with forecast updates on the enterprise service network.
- **PF_DERMS_FORECAST_UPDATES:** Input RDBMS table with forecast updates on the operational service network.
- **PF_DER_FORECAST, PF_DER_DEMAND_RESPONSE_FORECAST, and PF_WEATHER_ZONE_FORECAST:** The NMS runtime database tables that the processed data is loaded into.
- **PF_DER_FORECAST_ST, PF_DER_DEMAND_RESPONSE_FORECAST_ST, and PF_WEATHER_ZONE_FORECAST_ST:** The staging tables before merging the forecast data into the run time NMS tables.

Log Files

Log files are placed in the `$OPERATIONS_MODELS/derms_forecasts/log` directory. When the adapter is executed, old log files will be moved to the `$OPERATIONS_MODELS/derms_forecasts/logs/old_log` directory.

Log files are generated with following name format:

- **DERMS_Data_Errors_YYYYMMDD_HHMMSS.log:** Contains any invalid data rows along with an error code from the below list.
- **DERMS-001:** Too many fields.
- **DERMS-002:** Too few fields.
- **DERMS-003:** Invalid forecast date.
- **DERMS-004:** Invalid hour value should be integer.
- **DERMS-005:** Invalid hour value should be 0-23.
- **DERMS-006:** Duplicate hourly record found for day type/hour value.
- **DERMS-007:** Invalid Resource Name. The weather zone, DER, or Demand Response Group associated to the forecast could not be located in the configuration.
- **DERMS-008:** Invalid forecast value. It should be a float value.
- **DERMS-009:** Invalid number of hourly records.

Chapter 17

Profile Adapter

This chapter includes the following topics:

- Adapter Overview
- PV Profile Creation
- Load Profile Creation
- SRS Rule Configuration
- Load Profile File Format
- Error Handling

Adapter Overview

The NMS Profile adapter is responsible for two main tasks:

1. Create Photovoltaic (PV) profile curves based on a utilities location and the time of year.
2. Create and adjust temperature based load profiles for use in the real-time power flow analysis and forecasting.

PV Profile Creation

If required the NMS Profile adapter can be configured to create PV profiles based on the time of year and the utilities location. These profiles are used within the NMS power flow analysis to simulate time of day PV output based on varying ranges of cloud cover and help provide more accurate power flow solutions. The power flow analysis holds weather forecast data for customer configured weather zones, this forecast data drives which PV profiles are used for each weather zone. For example if a customer had two weather zones "Coastal" and "Mountain", If it was predicted to be "Sunny" from 9am-1pm then "Cloudy" from 1pm-6pm in the "Coastal" zone the analysis would use the proper output for each hour using snippets from both profiles. For solutions from 9am-1pm the analysis would use the "Sunny" profile then switch to using the "Cloudy" profile for solutions from 1pm-6pm. This same methodology would be applied to the "Mountain" zone power flow solutions using its own unique weather forecast. It is up to the utility to determine the granularity at which they require weather zones some may take a broad approach based on geographic region others may chose something more granular such as zip code.

The curves generated by the adapter reflect a normalized output and within the power flow analysis will be applied against the device specific kW output. The number of PV generation curves that represent varying levels of cloud cover is configurable; some customers may

require more granularity for accurate results. For example one customer may deem that only three profiles are needed to represent Sunny, Partly, and Cloudy. Another customer may configure this with 10 different levels of cloud cover for more granularity. During PV profile generation the adapter first creates a max output curve based on the location and time of year. The adapter then creates the various profiles based on customer provided scale factors to represent output based on different levels of cloud cover. For example a customer may say Sunny = 100%, Partly Cloudy=70%, Cloudy = 40%, *etc*.

Load Profile Creation

The main purpose of the NMS Profile adapter is to create and adjust temperature based load profiles. These profiles are used within the NMS power flow analysis to simulate time of day load behavior for a particular temperature band. Similar to PV profiles the load profile curve used at a particular time of the day will be dependent upon the weather zone forecast. As the temperature increases or decreases in each zone the power flow analysis will continually switch between different temperature based profiles to simulate load as accurately as possible.

The source of data for the load profiles is expected to be an AMI/MDM system that has aggregated the meter data up to the service transformer level. The data should be provided with an associated date/time. During the load the adapter will determine if a profile already exists for the transformer in which case the data will be used to adjust the existing profile or create an entirely new record if no data yet exists. The adapter will use the date/time provide to cross reference what the temperature was for that hour such that each hour worth of data can be utilized in the appropriate profile. If a new sample is received for Monday at 9am for profile Sample_xfmr_1 at 65F the adapter will need to determine if this sample already exists. If a sample already exists the adapter must look at the number of samples that have been taken into account and calculate a rolling average based on that. Each row in the pf_load_interval_data will consist of a profile id, day type, profile values, and temperature or temp band for which the profile is a part of. When PFService is finding a profile to use for each day it will essentially be grabbing snippets from each row within this table, since the temp generally doesn't stay constant all day. For example it may use hours 0-5 from the 60-69F profile then use hours 6-12 from the 70-79F profile, etc. For profiles that are used in study mode only (e.g. peak) the profile will be loaded into the database as a direct replacement, no averaging will be conducted. For study only profiles a blank date can be provided.

During an initial implementation no data will yet exist for load profiles so it may take some time to start building up accurate profiles. After each load however the profiles will adapt and change as needed based on new data.

Note: If a customer does not wish to use temperature based profiles, but still wishes to use the adapter to generate load profiles, the SRS rule "USE_TEMP_PROFILES" can be set to a value of "no". In this situation, it will be expected that the customer sets up the PF_TEMPERATURE_BANDS table with a single temperature band that encompass the entire range of the temperatures the service territory may encounter (for example, -20F to 110F). This all encompassing band should be keyed with an index of zero. When the adapter loads the profiles, all values will be placed in the temperature band indexed with a value of zero. When the power flow attempts to find the profile to use in the analysis, it will always use the temperature band keyed with zero when the "USE_TEMP_PROFILES" SRS rule is set to "no".

SRS Rule Configuration

A number of SRS rules exist that configure the behavior of the Profile adapter to meet different customer business requirements. To view the Load Profiles SRS Rules, open the Configuration Assistant's **Event Management Rules** tab, expand the **DMS Application Rules** navigation tree, and then either select or expand the **Load Profile Rules** tree.

Running the Adapter

The adapter can be run with following command line options:

```
ProfileAdapter [-adjDefaults] [-dbname <dbname>] [-clean]
[-partial] [-createPvOnly] [-debug number] [-verbose]
```

Option	Description
-adjDefaults	This option will force the adapter to adjust any default data associated to a load profile. When beginning to use temperature based profiles, it may take a significant amount of time to obtain all of the sampled data for different day type, temperature, and hour combinations. By running with this option, the adapter will adjust the defaulted data associated with each transformer profile to be more in line with actual data received. The processing will find the average scale factor for the different temperature bands that have received actual data for each hour. That average will then be applied to any temperature band for the same corresponding hour that has not yet received actual data and is still using a default. This helps to fill in any discrepancies where actual data is smaller or larger than the defaults. It is recommended this procedure be run once or twice per month to manage the defaulted data. This processing can be run standalone, and CSV files do not need to be present in the staging directory.
-clean	This option will clean all non default load profiles and load profile history before loading a new CSV file. The adapter will first truncate tables pf_loads_profile_samples and pf_loads_profile_override. It will then copy all distributed generation and default load profiles from table pf_load_interval_data to table pf_load_interval_data_tmp to preserve the default profiles. The entire contents of pf_load_interval_data will then be truncated and the defaults will be copied back from the tmp table. After the tables are cleaned up it will then process the new CSV file which essentially does a fresh load.
-dbname <dbname>	This option allows projects to use a separate DBService instance to handle all database requests from the adapter. To use this parameter, the LPDBService will need to be set up in the system.dat file. The value provided for <dbname> will be the name provided in the system.dat for the -service parameter for LPDBService. It is recommend that customers run with this parameter.
-partial	Used when doing a partial load of profiles. (for example, the entire data set is not being loaded).

Option	Description
-createPvOnly	Force the adapter to create PV profiles only, non processing of load profiles will be conducted.
-debug number	Required debug level (0-3).
-verbose	Turn on verbose output for adapter.

The following assumptions apply:

1. Location of the Load Profile Data
   - The load profile CSV files should be placed in the directory configured by the PA_ProfileDir SRS rule.
2. Processing the Load Profile Data
   - Once the CSV files have been processed by the adapter, they will be moved to the **parsed_csvs** subdirectory in the directory pointed to by SRS rule PA_ProfileDir
3. Once the data is validated, the load profile data will be written to the following tables:
   - PF_LOAD_INTERVAL_DATA: Stores the load profile curves.
   - PF_LOADS_PROFILE_SAMPLES: Stores the number of time each data points has been sampled.
   - PF_LOADS_PROFILE_OVERRIDE: Manages a record of which loads have device specific load profiles.
4. All Load Profile Adapter specific logs will be placed in a subdirectory labeled logs of the directory pointed to by the PA_ProfileDir SRS rule.

Load Profile File Format

Profiles are to be loaded on customer specified maintenance interval (Product recommends doing this weekly or bi-weekly to reduce the CSV file size). Profiles will need to be aggregated by the customer from meter data to service transformers that are represented as load points within the NMS. The data provided for each service transformer will represent a profile for a specific date, for study mode only profiles (for example, Peak, Seasonal Peak) a blank date can be provided.

The transformer load profile data is provided as a comma-separated file with a comma separated header.

The expected (but not required) header is:

```
Date,TransformerName,TransformerAlternateName,FeederName,DayType,Hour,
KW,KVAR,Temperature
```

File Characteristics	Values
Fixed length fields?	N
Delimiter	Comma
Header style	Comma separated, optional
Footer Style	No
No of files	Can be feeder based or 1 file for entire service territory

S. No	Field Name	Length	Mandatory	Data type
<Order of the element in the record>	<Name of the field>	<Field Length>	<Optional (N) or Mandatory (Y)> [Note #]	<Data type as per XSD standards>
1	Date (MM/DD/YY)	8	Y [1]	Date
2	TransformerName	32	Y	String
3	TransformerAlternateName	32	N [2]	String
4	FeederName	32	Y	String
5	DayType	12	Y	Enumerated string (weekday, weekend, peak) or associated Integer key that corresponds to the DayType
6	Hour	2	Y	Integer (max 23)
7	KW	N/A	Y	Floating point
8	KVAR	N/A	Y [3]	Floating point
9	Temperature	N/A	N [4]	Floating point, can be provided in either Fahrenheit or Celsius

Note 1: Date can be left blank is profile is for study mode only (for example, Peak, Seasonal Peak, etc).

Note 2: Optional fields may be omitted from the file, resulting in two consecutive commas.

Note 3: If KVAR is not measured, it can be calculated from KW with a default power factor.

Note 4: The temperature field is optional. A utility may provided temperature data for location, date, and time. If no temperature data is provided the adapter will use historical data stored in the NMS database. If this data is going to be omitted please leave the temperature field null.

Error Handling

The ingestion process for load profiles will perform error validation on the incoming data. It will create two error validation files and one timing file, which will be located in a subdirectory of the project configurable data location directory:

1. Invalid transformers (LP_Invalid_Transformers_YYYYMMDD_HHMMSS.log)

   This file will contain a list of the transformer/feeder combinations that cannot be located within the NMS model.

2. Invalid data (LP_Data_Errors_YYYYMMDD_HHMMSS.log)

   This file will contain any invalid data rows along with an error code from the table below.

3. Timing (LP_Timing_YYYYMMDD_HHMMSS.log)

   This file will provide timing information related to different processes occurring during the load of profile data. For example, how long it takes to read the CSV files, how long it takes to write profiles to the database, and so on.

Error Code	Error Description	Notes
LP-001	Too many fields	Expect 8 fields, 7 commas
LP-002	Too few fields	Expect 8 fields, 7 commas
LP-003	Invalid day type	The day type specified is not valid
LP-004	Invalid hour value	Should be integer type
LP-005	Invalid hour value	Should be 0 through 23
LP-006	Invalid KW value	Should be floating type
LP-007	Invalid KVAR value	Should be floating type
LP-008	Duplicate Record	Duplicated hourly record found
LP-009	Invalid KVA rating or utilization factor	These values should be present in table pf_loads
LP-010	Transformer loading exceeds the rating based on specified threshold.	The threshold can be configured in the SRS rules, currently set to 200%

Error Code	Error Description	Notes
LP-011	Invalid Weather Zone	The weather zone associated to the load could not be located in the configuration. Please validate table PF_WEATHER_ZONE to ensure this zone is added properly.
LP-012	Invalid temperature value should be floating type.	Should be floating type.
LP-013	Load is mapped to a zone but the zone does not appear to be a valid weather zone.	A zone was configured for the load but this zone does not appear to be configured as a weather zone. It is instead setup for something else like an individual DER forecast or Demand Response Group.
LP-014	A Null Weather Zone value was provided.	The load was configured with a null weather zone value. Validate the zone associated to the load is present in table PF_WEATHER_ZONE and forecast date is present in table PF_WEATHER_ZONE_FORECAST.
LP-015	A Null kW value was provided	The CSV file contained a record that had a null value for kW. This data will not be processed and the sample counts will not be increased. This data will be thrown away and not loaded.
NM-001	Dist Gen data could not be located	Dist Gen information could not be located for a dist gen associated with a net metered profile.
NM-002	Dist Gen has an invalid power source	Power source is invalid for a dist gen associated with a net metered profile.
NM-003	Dist Gen Invalid Weather Zone	Weather zone is invalid for a dist gen associated with a net metered profile.
NM-004	Dist Gen Profile is invalid	The profile associated to the dist gen could not be located. This is needed to perform net metered profile processing.
NM-005	Dist Gen output exceeds the connected transformers rating based on a specified threshold.	This rule uses the same SRS rule as used for LP-010 and can be configured in the SRS rules. The NM-005 error is looking purely at Dist Gen output in comparison to the rating of the transformer excluding any loading information.

Chapter 18

Switching Adapter

Introduction

The Oracle Utilities Network Management System Switching Adapter provides the ability to request and receive switching sheet updates. The Oracle Utilities Network Management System Switching Adapter is implemented as a Java application, running on the Oracle WebLogic Server platform.

One of the primary functions of the adapter is to process switching sheet requests and updates from an external system. These updates are tied to an NMS switching sheet via an external switching sheet ID supplied to it by an external system.

A secondary function of the adapter is to submit requests out to an external system. So as to maintain a link between the two systems, the external system will be required to pass back an external sheet ID or use the switching sheet's unique ID when submitting updates back to NMS.

All switching sheet lookups will be done using the switching sheet's unique ID number or from an external sheet ID. Neither of these values can be null for the messages to be processed.

The adapter is also capable of passing a view-only version of a switching sheet out to an external system. This view-only version of the switching sheet is generated as part of a report request to BI Publisher. This same mechanism is used to generate switching sheet reports that are used for printing and emailing purposes within NMS. The generated report file type and report contents are configurable.

Installation

Note: The installation instructions that follow assume that the Oracle Utilities Network Management System Web Gateway component has been installed. Refer to the *Oracle Utilities Network Management System Installation Guide* for complete instructions.

Installation Overview

The Oracle Utilities Network Management System Switching Adapter is delivered as a single file:

```
$NMS_BASE/dist/install/nms-swman.ear.base
```

The nms-install-config script is used to apply adapter configuration changes and create the nms-swman.ear file, which can be deployed to the Oracle WebLogic Server (see Software Configuration on page 12-10for configuration instructions).

To avoid performance impact on the main NMS application (cesejb.ear), it is recommended that the nms-swman.ear not be deployed on the same managed server where the cesejb.ear is deployed; however, both managed servers need to be in the same Oracle WebLogic Server domain.

Adapter Installation Instructions for Oracle WebLogic Server

Create a Managed Server (Optional)

To simplify creation of a new managed server, you may clone an existing Oracle Utilities Network Management System managed server.

1. Log in to the WebLogic Server Administration Console.

   Note: The URL for WebLogic will be http://*hostname*:*port*/console where *hostname* represents the DNS name or IP address of the Administration Server, and *port* represents the number of the port on which the Administration Server is listening for requests (port 7001 by default).

2. Click **Lock & Edit**.
3. In the **Domain Structure** tree, expand **Environment**, then select **Servers** to open the Summary of Servers page.
4. Select an Oracle Utilities Network Management System server in the Servers table and click **Clone**.

Click the link to the cloned server, select the General tab, change the Listen Port and SSL Listen Port to unique values.

Configure Data Source for the Adapters Managed Server

You may configure a new JDBC data source or add the adapter managed server as a target to an existing Oracle Utilities Network Management System **read/write** data source.

Note: See "Configure Database Connectivity" in the *Oracle Utilities Network Management System Installation Guide* for information on creating JDBC data sources.

1. In the **Domain Structure** tree, expand **Services**, then select **Data Sources**.
2. In the Data Sources table, click the **data source name** (either a new data source or an existing read/write NMS data source) to open the Settings for *JDBC_Data_Source_Name* page.
3. Select the **Targets** tab.
4. Add the adapter managed server to the list of targets.
5. Click **Save**.

Deploy the Adapter

1. In the left pane of the Administration Console, select **Deployments**.
2. In the right pane, click **Install**.
3. In the Install Application Assistant, locate the nms-swman.ear file.
4. Click **Next**.
5. Select **Install this deployment as an application**.
6. Click **Next**.
7. Select the servers and/or clusters to which you want to deploy the application.

Note: If you have not created additional Managed Servers or clusters, you will not see this assistant page.

8. Click **Next**.
9. Set the deployed name of the application to: *nms-swman*.
10. Click **Next**.
11. Review the configuration settings you have specified.

Click **Finish** to complete the installation.

Software Configuration

Configuration for the Oracle Utilities Network Management System Switching Adapter comes from the following sources:

- CES_PARAMETERS database table
- Oracle Utilities Network Management System configuration rules
- JBot Commands

Support for Encrypted Configuration Parameters

Some configuration parameters that are stored in the CES_PARAMETERS database table contain sensitive information, such as authentication credentials, which should be protected. To protect this data, the VALUES column can be encrypted using Oracle WebLogic Server encrypt utility. This utility encrypts cleartext strings for use with Oracle WebLogic Server. Its output can then be used to populate values in CES_PARAMETERS database table.

For detailed information, see "encrypt" in the Oracle WebLogic Server Command Reference.

Configuration Parameters

Entries in the CES_PARAMETERS database table for the Oracle Utilities Network Management System Switching Adapter should have value 'SwmanInterface' in the APP column. Column ATTRIB should contain name of the configuration parameter and column VALUE its value.

The following table describes the general configuration parameters.

Parameter	Description
config.enabled	Enable/disable Switching Interface Default: true
config.credentials	Absolute path to the file containing user credentials the adapter will use to communicate with Oracle Utilities Network Management System. Either this parameter or both config.username and config.password parameters should be provided. If all are present, then the config.username/ config.password pair is used.
config.username	Valid NMS username, which has the 'NmsService' role in WebLogic Server.
config.password	NMS user password. Value of this parameter should be encrypted.
config.nms_url	URL for accessing Oracle Utilities Network Management System. If this parameter is not provided then it is assumed that Switching Adapter is deployed on the same Managed Server as cesejb.ear.
pollingInterval	How often the adapter should poll the database for updates. Values are in seconds. Default: 15

Oracle Utilities Network Management System Configuration Rules

Below is the list of configuration rules in the Oracle Utilities Network Management System, which contribute to the adapter's functionality. These rules are not directly used by the Oracle Utilities Network Management System Switching Adapter.

SwmanUserText_en_US.properties

BIP_GENERATE_REPORT.SwitchingInterface.<sheet cls>.*

These rules define what type of report to generate if a request is made to submit a view-only version of a switching sheet to an external system. See Product configuration file SwmanUserText_en_US.properties for more details. Below is a configuration example for a report that will be generated that will use the PlannedSheet template and include the Steps, Request and Safety Documents sections in the report. The file name of the report will be <Sheet Type>_<Sheet Number>.pdf.

BIP_GENERATE_REPORT.SwitchingInterface.3117.report_location = /WebSwitching/Templates.xdo
BIP_GENERATE_REPORT.SwitchingInterface.3117.report_template = PlannedSheet
BIP_GENERATE_REPORT.SwitchingInterface.3117.report_format = pdf
BIP_GENERATE_REPORT.SwitchingInterface.3117.report_params = SHEET_CLS=$swmanSheetCls.switchSheetCls$; SHEET_IDX=$switchSheetIdx$; SHOW_SAFETY=true; SHOW_REQUEST=true; SHOW_STEPS=true;
BIP_GENERATE_REPORT.SwitchingInterface.3117.base_file_name = $swmanSheetCls.switchSheetType$_$switchSheetIdx$

JBot Commands

UpdateExternalSheetCommand

To trigger updates from NMS to the adapter, the JBot command UpdateExternalSheetCommand should be used. This can be called after a state transition of a switching sheet or at any point in the project's configuration where a JBot command can be called from a particular switching sheet. See the command's documentation for more details.

The command will result in a switching sheet object being passed to the adapter with all the information from the switching sheet. The command includes a parameter called "include_sheet_report" which will trigger a report to be generated for the sheet before it is passed on to the adapter. This report will be included with the switching sheet object as a file attachment.

An optional "update_type" parameter can also be specified, which can then be used by the adapter to process the request based on the value specified in this parameter. For instance you may want to process state transition updates differently from manual updates initiated by the user.

Database Schema

Oracle Utilities Network Management System Switching Adapter uses two databases tables to store data going in and out of the adapter.

SWMAN_INTERFACE_UPDATES

This is the main table that the adapter periodically polls for updates. This table is also used to submit updates to an external system. When polling, the query searches for all records where the interface_update_status value is equal to “NEW” and processes the values ordered by their unique ID values.

Field	Data Type	Comments
ID	Number	The unique ID for the record.
INSERT_USER	Varchar2(100)	The user/system that inserted or caused the record to be inserted.
INSERT_TIME	Date	The time the record was inserted or when the change occurred.
UPDATE_USER	Varchar2(100)	The user/system that updated the record to be inserted.
UPDATE_TIME	Date	The time the record was updated.
SEQ_SHEET_ID	Number	The unique ID of the sheet this entry pertains to. This is used to identify the sheet when an entry is sent to an external system when we do not yet have an external_id.
EXTERNAL_ID	Varchar2(4000)	The unique external ID associated with a single switching sheet in NMS. We use this to look up the sheet when a request comes in from an external system.
INTERFACE_UPDATE_STATUS	Varchar2(1024)	This is the status of this record. It is not the status of the sheet. This is used to define when the entry is new, in error, or complete. It is not limited to those specific status values. These status values are only used by the interface to determine how to process the record.
ERROR_MESSAGE	Varchar2(4000)	The error that occurred processing the last request. This may be populeted by the NMS interface or the interface that processed the update from NMS. The distinction will be identified by the interface_update_status value.
STATUS	Varchar2(1024)	The status of the sheet. This may be the status of the NMS sheet or the external sheet. It depends on the value specified in the interface_update_status field.
STATUS_DETAILS	Varchar2(4000)	Some details about the status. For instance, if it was rejected, then a rejection reason would be found in this field.
START_TIME	Date	The Start Time of the sheet this request pertains to. This is normally only specified when creating a new sheet.
FINISH_TIME	Date	The Finish Time of the sheet this request pertains to. This is normally only specified when creating a new sheet.
DEVICE_ALIAS	Varchar2(4000)	The Device of the sheet this request pertains to. This is normally only specified when creating a new sheet.
DESCRIPTION	Varchar2(4000)	The Description of the sheet this request pertains to. This is normally only specified when creating a new sheet.

LOCATION	Varchar2(4000)	The Location of the sheet this request pertains to. This is normally only specified when creating a new sheet.
SAFETY_DOC_ID	Varchar2(4000)	The Safety Document ID of a specific safety document that is linked to the sheet. This is only a textual reference to the safety document and does not include any details about the safety document.

SWMAN_INTERFACE_DOCUMENTS

This is a support table for the SWMAN_INTERFACE_UPDATES table. This table stores one or more file attachments related to a record in SWMAN_INTERFACE_UPDATES. These documents can be either passed to an external system or passed into NMS. When being passed into NMS, the documents are attached to the switching sheet and an External Document. If the external system updates the document with new content and the name of the file remains the same, then that file will replace the previous file that is attached to the switching sheet. This allows for constant updates to occur from an external system without a constant buildup of file attachments.

Field	Data Type	Comments
DOCUMENT_ID	Number	The unique ID for the record.
FILE_NAME	Varchar2(256)	The name of the file.
DESCRIPTION	Varchar2(4000)	A description for the file.
LENGTH	Number	When populated, the size of the file in bytes.
DATA	BLOB	The raw file data. Before the file is stored in this field, the file needs to be compressed using gzip.
FILE_MODIFIED_DATE	Timestamp	The date the file was last modified.
UPDATE_ID	Number	The unique ID number of the SWMAN_INTERFACE_UPDATES record this entry pertains to.

Troubleshooting

NMS Switching Adapter uses Apache log4j library to log error, warning and debug messages. To enable debug output the following lines should be added to the log4j configuration file used by the WebLogic Server where the adapter is deployed.

SwmanInterface poller debug. Data that is read in from an external source that needs to be processed and updated in NMS.

```
<Logger name="SWMAN_INTERFACE_POLLER" level="debug"
additivity="false">

    <AppenderRef ref="Console"/>

</Logger>

Periodic polling debug.

<Logger name="SWMAN_INTERFACE_POLLING" level="debug"
additivity="false">
    <AppenderRef ref="Console"/>
</Logger>


SwmanInterface listening debug.  Listening for switching sheet
updates.

<Logger name="SWMAN_INTERFACE_LISTENER" level="debug"
additivity="false">
    <AppenderRef ref="Console"/>
</Logger>


Configuration debug.

<Logger name="SWMAN_INTERFACE_CONFIGURATION" level="debug"
additivity="false">
    <AppenderRef ref="Console"/>
</Logger>


Database (DAO) related debug.

<Logger name="SWMAN_INTERFACE_DB" level="debug" additivity="false">
    <AppenderRef ref="Console"/>
</Logger>


Bean registration debug.

<Logger name="SWMAN_INTERFACE_REGISTER_BEANS" level="debug"
additivity="false">
    <AppenderRef ref="Console"/>
</Logger>
```

```
Controller Bean debug. Used to start the polling bean.

<Logger name="SWMAN_INTERFACE_CONTROLLER" level="debug"
additivity="false">
    <AppenderRef ref="Console"/>
</Logger>
```

At runtime, debug output can be toggled by using the Set Debug dialog while logged into NMS as a Configuration Assistant user. Each of the debug categories will be listed for application “Switching Interface.”

Chapter 19

Web Switching and Web Safety Notifications

This chapter includes the following topics:

- Web Switching
- Web Safety

Projects have the option of creating a Java Message Driven Bean (MDB) that can listen for altered Web Switching and/or Web Safety data. This data is sent out periodically based on the parameter BroadcastIntervalForUpdates configured in the `SwmanParameters.properties` file. Web Switching and Web Safety can each have their own adapter and process the updates individually.

Web Switching

Web Switching updates will be sent to tools and adapters specified by the `BroadcastSwitchingListeners` in the `SwmanParameters.properties` file.

The data being broadcast out includes all the fields found in the database view `SWMAN_SHEETS_LIST`. Note that this data is also used to update each NMS user's Switching Sheet List. This database view should be kept to a minimal size so as not to flood the network with unnecessary data.

Web Safety

Web Safety updates will be sent to tools and adapters specified by the `BroadcastSafetyListeners` in the `SwmanParameters.properties` file.

The data being broadcast out includes all the fields found in the database view `SWMAN_SAFETY_DOCS_LIST`. Note that this data is also used to update each NMS user's Safety Document List. This database view should be kept to a minimal size so as not to flood the network with unnecessary data.

Java MDB Implementation

When defining your Java MDB, you'll need to implement interface class `OMSListener`. Here's a Web Switching example of the methods that will need to be implemented. The same would be required for a Web Safety adapter. This example simply prints the data as it is received. It will be up to you to determine how you want to process that data.

```
    @Override
    public String getName() {
        return "MyWebSwitchingAdapter";
    }

    @Override
    public void onSelection(CMMSelection cmms) {
        // Do nothing.  Not used in this example, but still required.
    }

    @Override
    public void onHLMessage(HLMessage message) {
        if ("UPDATE_ENTRIES".equals(message.getMessage())) {
            if (Logger.HLMESSAGE.isDebugEnabled())
                    Logger.HLMESSAGE.debug("Sheet Adapter - Message: "
+ message.toString());
            Object hlmObject =
((HLProcessedMessage)message).getProcessedMessage();
            if (hlmObject instanceof EJBResultSet){
                try {
                    EJBResultSet resultSet = (EJBResultSet)hlmObject;
                    for (Object[] selection_set :
resultSet.selection_set) {
                       String sheetData = "Sheet - ";
                    for (int j = 0; j < resultSet.column_names.length;
j++) {
                          sheetData += resultSet.column_names[j] + ":
";
                            sheetData += selection_set[j] + ", ";
                       }
                       System.out.println(sheetData);
                    }
                } catch (Exception ex) {
                    Logger.HLMESSAGE.error("Failed to process sheet
updates: ", ex);
                }
            }
        }
    }
```

The key point is that the adapter should listen for `UPDATE_ENTRIES` messages. This is true for the Web Switching and the Web Safety messages. If you plan to process both Web Safety and Web Switching updates, you will need a separate Java MDB for each.

The `getName()` method that you implemented above has to return a name that matches up with the adapter name you specified in your `BroadcastSwitchingListeners` or `BroadcastSafetyListeners` configuration parameter. The same adapter name should not be specified in both parameters.

Within your Java MDB class, you will also need to add the following variable and method call in your `PostConstruct` method.

```
private final BaseMessageHelper messageHelper = new
BaseMessageHelper();

    @PostConstruct
    public void init()
    {
        messageHelper.addOMSListener(this, getName());
    }
```